AMATEUR RADIO

VALVE TECHNIQUE

AN RSGB PUBLICATION

VALVE TECHNIQUE

Published by the

INCORPORATED RADIO SOCIETY OF GT. BRITAIN

New Ruskin House, Little Russell Street, London, WC1

APRIL 1948

CONTENTS

		Page
FOREWORD		3
Chapter 1.	GENERAL CONSIDERATIONS GOVERNING VALVE OPERATION	6
Chapter 2.	VOLTAGE AMPLIFIERS	11
Chapter 3.	AUDIO FREQUENCY POWER AMPLIFIERS	23
Chapter 4.	RADIO FREQUENCY POWER AMPLIFIERS, FREQUENCY MULTIPLIERS AND OSCILLATORS	31
Chapter 5.	DETECTORS	46
Chapter 6.	FREQUENCY CHANGERS	56
Chapter 7.	POWER RECTIFIERS	64
Chapter 8.	SPECIAL APPLICATIONS	71
Chapter 9.	NOISE GENERATED IN VALVE AMPLIFIERS	82
Chapter 10.	VALVES FOR V.H.F.	87
Chapter 11.	BIBLIOGRAPHY	97
	INDEX	98

Co-Authors : D. N. CORFIELD, D.L.C. (Hons.), A.M.I.E.E., G5CD.

P. V. CUNDY, A.M.I.E.E., G2MQ.

General Editor : JOHN CLARRICOATS, G6CL.

General Secretary Incorporated Radio Society of Great Britain.

FOREWORD

THE purpose of this Publication is to present in as simple a manner as practicable the calculations associated with the application of thermionic valves. It is hoped thereby that the reader will find it possible to utilise the information published by the Valve Manufacturers to the best advantage.

The simplified methods described are sufficiently accurate to obtain optimum results, bearing in mind the usual tolerances of component values and the normal spread of valve characteristics.

It has been assumed that the reader is familiar with the fundamental theory of valves and radio practice as covered in the *Amateur Radio Handbook* and *Radio Handbook Supplement*, and any theory of valves contained herein is in general supplementary.

As far as possible the contents have been confined to valve technique and do not cover in detail any matters properly within the scope of circuit technique. For such information the reader is referred to the other publications in this series.

The co-ordinating authors wish to acknowledge the assistance of Messrs. H. L. Gibson, E. D. Hart, M.A., M.I.R.E., and J. H. Shankland, B.Sc., G8FM, in the preparation of this book.

Glossary of Terms

The following glossary of terms used in this booklet will assist the reader to understand the text without reference to other publications.

A.C.

Alternating Current, of any frequency, but usually applied to power frequencies, *e.g.*, 50 cycles per second.

A.F.

Audio Frequency. Alternating at a frequency within the range of hearing, *e.g.*, between 20 and 12,000 cycles per second.

A.V.C.

Automatic Volume Control. Method employed in a receiver to reduce sensitivity on powerful signals, while leaving the sensitivity at maximum for weak signals.

B.F.O.

Beat Frequency Oscillator. Valve stage employed in a receiver for providing a continuous carrier wave with which the incoming signal beats or heterodynes, producing an audible note, and rendering Morse signals readable.

D.C.

Direct Current. Steady, unfluctuating. Not necessarily a *current*, but merely a steady state, as in " D.C. resistance," " D.C. voltage," etc.

H.F.

High Frequency. Alternating at a frequency between, say, 100 kc/s. and 20,000 kc/s.

H.T.

High Tension. The steady voltage supply which provides the potential applied between anode and cathode of a valve.

I.F.

Intermediate Frequency. The fixed frequency at which most of the amplification in a superhet is carried out.

Q.

Measurement of the " usefulness " of a coil or tuned circuit. The reactance of a coil divided by its resistance at the frequency in use.

R.C.C.

Resistance-Capacity Coupled. Method of coupling a voltage amplifier stage to the succeeding valve. Also referred to as R.C. coupled, or capacity coupled, and sometimes (wrongly) as resistance coupled.

R.F.

Radio Frequency. Alternating at a frequency between, say, 15 kc/s. and 20,000 kc/s. A general term.

R.M.S.

Root Mean Square. The usual method of describing and measuring A.C. voltages. 0.707 times the peak voltage. The R.M.S. value represents the " equivalent " value—*e.g.*, 20 volts A.C., R.M.S., across a resistor would produce the same amount of heat as 20 volts D.C.

V.H.F.

Very High Frequency. (Or U.H.F., Ultra-High Frequency). Alternating at a frequency higher than, say, 30 Mc/s.

Class A

Method of operating a valve so that the grid remains always negative to the cathode. The applied signal voltage is small enough to allow the operating point to remain on the straight portion of the I_a/V_a curve, and no grid-current flows.

Class AB1, Class AB2, Class B

Methods of operating a valve, by progressively increasing both the steady bias voltage on the grid, and the applied signal voltage. The operating point moves beyond the straight portion of the I_a/V_a curve. In Class AB1, no grid-current flows. In Class AB2, grid-current is permitted to flow. In Class B, the steady bias is such that, without any applied signal voltage, the anode current would be reduced to zero. With the signal voltage applied, grid current flows, and the valve is, of course, working beyond the straight portion of the I_a/V_a curve ; because of the steady bias, anode current flows only during the positive half-cycle of the applied signal voltage. Class AB1, AB2 and B all cause distortion of the waveform, and this must be corrected—usually by using two valves in push-pull—but correction is not necessary at radio frequencies, where tuned circuits are used to restore the sine waveform.

Class C

Method of operating a valve with a steady bias more than sufficient to reduce the anode current to zero under no-signal conditions. With the signal voltage applied, anode current flows for only a part of the positive half-cycle. A tuned circuit in the anode converts these " flicks " of anode current into useful power, with current of sine waveform.

Class A, AB1, AB2, B and C

In that order, require progressively greater signal or input-voltages and correspondingly greater input powers, progressively greater steady bias voltages, and, still in that order, they are progressively more efficient—*i.e.*, a valve in Class AB1 provides greater useful output power for the same H.T. supply voltage and current than one in Class A, Class AB2 greater than Class AB1, and so on.

Symbols

The symbols which will be used are, as far as possible, in accordance with those agreed between the *British Radio Valve Manufacturers' Association* and the *British Standards Institution*. Certain other symbols, not included below, are listed in the particular section in which they are used.

Voltage

V_a	D.C. anode voltage.
$V_{a(b)}$	D.C. H.T. supply voltage.
V_g	D.C. grid voltage.
V_{g_1}, V_{g_2}, V_{g_3}, *etc.*	D.C. voltages applied to grids numbered outwards from the cathode.
V_{sig}	Signal voltage.
V_{out}	Output voltage.

Current

I_a	D.C. anode current.
I_g	D.C. grid current.
I_{g_1}, I_{g_2}, *etc.*	Currents to grids Nos. 1, 2, etc.

Resistance

R_a	External anode load resistance.
R_g	External grid leak.
R_{g_2}	External resistance in series with g_2.
R_k	External cathode resistance.

Impedance

r_a	Internal anode impedance.
Z_a	External load impedance.

Capacity

c_{in}	Input capacity (grid to all electrodes less anode).
c_{out}	Output capacity (anode to all electrodes less grid).
c_{ga}	Capacity of grid to anode.

Miscellaneous

μ	=	Amplification factor.
ω	=	$2\pi \times$ frequency.
L	=	Inductance.
W_{out}	=	Power output.
w_a	=	Anode dissipation.
g_m	=	Mutual conductance.
g_c	=	Conversion conductance.
f	=	Frequency.
Δf	=	Total circuit band width.

CHAPTER 1 GENERAL CONSIDERATIONS GOVERNING VALVE OPERATION

IT is proposed in this chapter to give some guidance regarding the considerations which govern the operating conditions of thermionic valves.

It is not generally understood why valve manufacturers are so particular about the conditions of use. The published ratings are believed by many to be unnecessarily conservative. It is hoped that a study of the subject, as dealt with in the following pages may result in clearing up some of these doubts.

Types of Cathodes

Originally all valves used pure tungsten—operating at very high temperatures, as an electron source—but since the discovery of the improved performance obtained by the introduction of certain additional agents the use of this metal has been discontinued for all receiving and small transmitting valves.

If, in a given valve, the emission current is determined by its geometry and electrode potentials, rather than by the cathode emission available, the current is said to be " space-charge limited " and the emission current will be independent of slight changes of cathode temperature. If the electrode potentials are adjusted so as to tend to draw-off more current than the cathode can supply, the current is said to be " temperature limited " ; any slight change in cathode temperature results in an immediate change in emission current.

Pure Tungsten

Pure tungsten has a definite maximum emission, dependent upon its temperature, and owing to the non-employment of any activating addition agent cannot be " poisoned " or de-activated. It may, therefore, be run under temperature-limited conditions without ill effect and it will not be damaged by over-heating, providing the period of over-heating is not long enough to produce a material reduction in the cross-section of the filament, by simple evaporation of the metal.

Pure tungsten operates at a temperature of about 2300°C. with an emission of about 4 milliamperes per watt of cathode heating.

Thoriated Tungsten

By the correct addition of thoria and carbon to tungsten, an emitting surface of greatly increased efficiency results. This is known as " thoriated tungsten." Thoriated tungsten runs at a temperature of approximately 1650°C. and has an emission efficiency of about 30 milliamperes per watt. The main factor in achieving this improvement is a very thin layer of thorium on the cathode surface.

During valve manufacture some of the thoria will have been reduced to thorium within the filament core, the thorium then diffusing outward to form a surface film. Under running conditions there is a slow loss of thorium due to evaporation, but the rate of diffusion should keep pace with it, maintaining a constant surface. The rate of loss of thorium is somewhat accelerated by drawing an emission current. A poor valve may be unable to cope with this

condition and the emission will "sag" when H.T. is applied, recovering again during "filament only" stand-by periods. This sagging performance is typical of "below par" thoriated tungsten valves. Some improvement may be achieved by a slight increase in filament volts; the rate of diffusion may increase more rapidly than the loss, and, due to the higher temperature, the emitting properties of the layer will as a consequence be improved. A large increase in temperature however will increase the loss-rate, and a smaller fraction of the surface will be coated, whilst above 2200°C. the cathode will behave like one of pure tungsten. Any increase in temperature will result in some shortening of valve life for, although the relative diffusion rate may be increased the absolute loss-rate will also be increased.

It is sometimes possible to re-activate a valve by "flashing" at about 2·5 times normal voltage for 1 minute. This operation, which reduces more thoria to thorium, should be followed with a 15 to 30 minutes run at about 1·5 times normal filament voltage, to give the new thorium a chance to diffuse to the surface. Should there be no thoria left to reduce, this treatment will "flash-off" the existing thorium with no means of replacing it and the valve will be useless.

Thoriated tungsten valves should not be run continuously in a temperature-

Two transmitting valves o modern design suitable for use at very high frequencies.

Both are Twin Beam Tetrodes.

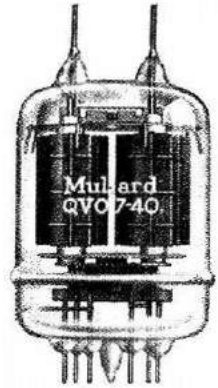

limited condition, as this tends to be destructive to the cathode surface, but an occasional excursion into this region may not be harmful. For instance, in an anode-modulated Class C stage, temperature limitation can occur at peak-positive grid-voltage and peak-positive anode-voltage for 100 per cent. modulation without harm. This is possible mainly, because 100 per cent. modulation occurs only occasionally in practice. Although no harm to the valve results there will be some distortion and decrement modulation. The appearance of decrement modulation in an anode modulated stage that has previously been satisfactory is often due to incipient low emission of the power amplifier. If manufacturers' data on safe emission is not available the following information should enable a safe design figure to be obtained.

Average D.C. cathode current maximum, 7·5 mA per watt of cathode heating.

Peak cathode current maximum, 30 mA per watt of cathode heating.

Oxide-Coated Cathodes

The oxide-coated cathode represents an advance on thoriated tungsten even greater than the latter shows over pure tungsten. The operating temperature has been reduced to approximately 720°C., and the emission figure raised to 200 milliamperes per watt. The cathode coating is formed from a paste of the oxides of the alkaline earth metals, mostly barium, applied by dipping or spraying. The process is equally suitable for directly or indirectly-heated cathodes whereas the previous types were confined to the directly-heated case.

The emission is regarded as arising from a film of metallic barium on the surface of the oxide layer. The free barium is formed by reduction of the oxide and is brought to the surface by diffusion. Thus the mechanism is similar to that of thoriated tungsten and there are similarities in the activation treatment. Barium is very active chemically and the thin film on the cathode surface can easily be poisoned by traces of gas liberated internally by incorrect operation. Valves that have failed prematurely, due to surface poisoning, can sometimes be repaired by flashing, *i.e.*, evaporating the damaged layer and re-forming some more barium, and then running to diffuse the barium to the surface. If a valve has had a reasonable life and is failing due to loss of barium rather than poisoning this treatment will accelerate the decline. The suggested treatment is as below :

(*i*) Flash for 1 minute at 2¼ times normal filament voltage.

(*ii*) Run for 30 minutes at 1¼ times rated filament voltage with rated voltages applied to all other electrodes.

(*iii*) Run for 1 hour at rated filament volts with no other potentials applied.

Although the oxide-coated cathodes should never be run under temperature-limited conditions, no harm results from running at considerably reduced temperatures providing the emission demand is also reduced. For example a resistance-capacity-coupled pentode audio-voltage-amplifier may have its total cathode current reduced to perhaps 0·5 milliampere by the high value of anode and screen resistors normally used. Under these conditions most valves will work down to 70 per cent. of normal filament voltage giving prolonged life and a reduction in hum and thermal noise. If the filament voltage is raised above normal the emission, and particularly the peak emission, will be increased, but the life will be shortened due to the greater rate of barium evaporation. Further, since some of the barium will be deposited upon the grid, there is an increased chance of developing grid-emission which is emphasised by the increased grid temperature resulting directly from the increased filament wattage.

Some valves intended specifically for Class C or other operation demanding high peak emission, are designed with abnormally hot cathodes, the shorter life expectancy being off-set by the improved performance. The peak emission that can be drawn depends upon the duration of, and space between, the peak demands and where manufacturers' figures are not available the following information can be taken as a guide.

Average D.C. cathode current maximum 20 mA per watt.

Class B operation, conductivity nearly 50 per cent. of time, peak current maximum 50 mA per watt.

Class C operation, conductivity 10 per cent. to 20 per cent. of time, peak current maximum 200 mA per watt.

Pulse operation, conductivity 0·1 per cent. to 0·5 per cent. of time, peak maximum 500 mA per watt.

Electrode Dissipation

Most metals, and many other substances used in valve making, have the power of absorbing large quantities of various gases and it is the manufacturers' concern to ensure that all parts are treated so as to prevent evolution of this gas during life; the hotter the part runs, the more vigorous and lengthy the treatment has to be. From the cost point of view it is often better to add radiating fins in order to reduce the running temperature of an electrode rather than to pay for more complicated treatment processes. To safeguard his own reputation, a manufacturer will treat his components so that there is a fair margin between the maximum rating and the point of serious gas release, but economic considerations dictate that this margin shall not be large. Any over-dissipation by an electrode will, therefore, entail a risk of gas evolution which may either poison the emitting surface or partly destroy the vacuum.

Manufacturers' data is usually very definite in specifying maximum dissipation and it should not be exceeded. In the rare cases where no data is available, any electrode, other than a filament or cathode, that shows a visible glow must be regarded as overloaded, and dissipation must be reduced. Among valves of the transmitting type there are some using tantalum components. Tantalum, unlike most other metals tends to absorb gas rather than evolve it when operating at high temperatures. Valves using this material are usually designed so that for normal dissipation the anodes run at a bright orange temperature. These are obvious exceptions to the "no glow" rule.

Negative Grid Current

It is well-known that the flow of grid current through a grid resistor produces a negative bias on the grid and it follows that if the direction of the grid current is reversed, the effect of the potential drop across the grid resistor would be to produce a positive bias, or at least reduce any negative bias already present, which will in turn result in increased space current and dissipation.

Such a reversed or negative grid current can arise from three causes:

(*a*) Internal leakage paths within the valve or its base.

(*b*) Positive ion current, due to faulty vacuum.

(*c*) Electron emission from the grid (grid emission).

All these factors tend to increase with increase in temperature, and as increased temperature will result from any increase in dissipation the defect, once it has developed, tends to maintain and increase itself. However, where cathode bias is used, any increase in cathode current provides automatically an increase in bias so that in this case there is a slight compensating action.

The existence of this type of trouble will show itself as excessive anode current (leading to damage of the valve or the power supply) and/or heavy damping of the input circuit, such that the previous stage will appear to have lost most of its amplification.

The damage can be avoided by attention to the following points:

(*i*) Do not use excessive filament voltage. Never exceed 106 per cent. of the rated value.

(*ii*) Do not permit excessive dissipation.

(*iii*) Limit the total D.C. resistance of the grid-cathode path to a safe value.

The first two precautions should be obvious, whilst condition (*iii*) can be

met by studying the manufacturers' data. When no data is available, the following figures are suggested as a guide:

For fixed bias.

Total cathode current (in milliamperes) $\times$ grid resistance (in megohms) < 15.

For cathode automatic bias.

Total cathode current (in milliamperes) $\times$ grid resistance (in megohms) < 25.

By the above rules where a resistance is included in the grid path of two or more valves (such as the decoupling and diode load resistors of A.V.C. systems), its value must be multiplied by the number of common paths in order to ascertain the equivalent resistance of the grid path in any one valve.

Heater-to-cathode potential

It is good practice to keep the potential difference between the heater and cathode of an indirectly-heated valve as low as possible. Where the maximum rating is specified it should be observed; in other cases the potential in ordinary types of valves should not exceed 50 volts. Modern valves have a very high order of heater-to-cathode insulation. For example, rectifiers in series-run apparatus may have an average of 250 volts (with peaks of over 500 volts) between heater and cathode, and great liberties may sometimes be taken with ordinary valves without deleterious results.

High heater-to-cathode potentials will not cause any slow deterioration of the valve. Either the insulation will stand the voltage or breakdown will occur leaving a permanent short-circuit between heater and cathode or a broken filament. Breakdown is more likely to occur during warming up, and its possibility can be reduced if the application of heater-to-cathode potential is delayed until the cathode has attained operating temperature.

Some leakage current between heater and cathode may flow even with quite low applied voltages and increasing this voltage will not increase the current necessarily in proportion. The leakage current will also be different in value depending on the direction of the applied voltage. In certain types of valve it is possible for the heater to emit to the grid, causing hum, and if this occurs the hum can be reduced by raising the heater-cathode voltage so that the heater is positive with respect to the grid and cathode; generally a D.C. voltage of the order of $+5$ to $+10$ volts applied to the centre tap of the heater supply is all that is necessary.

If it is necessary to open the cathode circuit of a valve for the purposes of keying or muting, a resistance not exceeding 0·25 megohms should be permanently wired between cathode and heater to avoid subjecting the insulation to the full anode or screen potential.

The heater-to-cathode insulation if included across any tuned circuit may give rise to modulation hum and frequency instability because the insulation will vary with temperature and hence with heater voltage, and the capacity will alter with movement of the heater within the cathode.

Switching Sequence

The application of heater and anode voltages simultaneously results in a valve operating for a short period under temperature-limited conditions during the warming-up process. For this reason it is advisable to delay the application of H.T. voltage until the cathodes have attained normal temperature. This complication is not worthwhile for vacuum valves operating at less than 400 volts. Delayed switching is desirable for higher voltages and *essential* for gas-filled or mercury-filled valves.

CHAPTER 2 VOLTAGE AMPLIFIERS

THE following additional symbols are used in this Chapter.

R_o	.. .. ..	Succeeding valve grid leak.
C_k	.. .. ..	Cathode by-pass condenser.
C_o	.. .. ..	Inter-stage coupling condenser.
C_{g2}	.. .. ..	Screen by-pass condenser.

Voltage Amplifiers

When it is desired to use a valve primarily for the purpose of increasing the signal voltage, such as in an audio or I.F. amplifier, as distinct from increasing the power, such as in an A.F. or R.F. output stage, there are four possible methods, *i.e.* resistance-capacity coupling, choke-capacity coupling, tuned anode or tuned grid coupling and transformer coupling.

In general, the first is suitable only for audio frequencies unless the gain per stage is very low and the output voltage required fairly small. The second is suitable for somewhat higher frequencies, providing the choke is suitably chosen. The last two may be used up to very high frequencies, the limitation being the tuned circuit, the transformer and the valve itself.

Somewhat different considerations apply to these methods when pentodes are used instead of triodes. The necessary procedure to employ, in order to design such amplifiers, is described below.

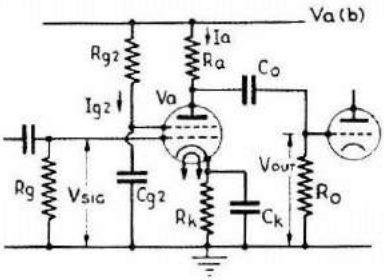

Fig. 1.
Typical basic circuit of a resistance capacity coupled voltage amplifier employing a tetrode or pentode valve.

Resistance-Capacity Coupled (R.C.C.) Amplifiers

The conventional circuit of an amplifier is shown in Fig. 1. R_g is the grid leak across which the input voltage V_{sig} is applied. R_a is the anode load resistor to which the H.T. line voltage $V_{a\ (b)}$ is applied. V_a is the anode voltage on the actual anode. R_k is the cathode bias resistor by-passed by the decoupling condenser C_k. These are omitted in the case of directly heated battery valves. C_o is the coupling condenser and R_o is the grid leak of the succeeding stage across which the amplified output voltage V_{out} is required.

If the amplifier valve is a pentode or tetrode and not a triode then there is a screen dropping resistor R_{g_2} by-passed by the condenser C_{g_2}, the actual screen voltage being V_{g_2}.

The first essential is to choose the type of valve. The considerations are:—the output voltage required, the H.T. voltage available, the value of the succeeding valve grid leak and the highest frequency to be amplified. If, for example, the succeeding valve is an output stage it will require an input signal between say 5 volts and 50 volts or more, depending on the type, whereas if it is a further voltage amplifier, the input is not likely to exceed 10 volts and almost any valve will furnish this voltage. The H.T. line voltage will usually be fixed by the design of the remainder of the equipment, but as a general guide this voltage must not be less than about four times the output voltage V_{out} required, and preferably not less than six times. As long as the actual anode voltage V_a does not exceed the makers' rating all is in order.

The value of the succeeding stage grid leak R_o is mainly a question of the type of valve used. Output stages should not as a rule have grid leaks higher than 100,000 ohms unless they are used with automatic grid bias in which case up to 500,000 ohms may be used, whereas small valves (as used in voltage amplifiers) may use a megohm or higher. The coupling condenser C_o should be so chosen that it has a low reactance compared with the value of R_o at the

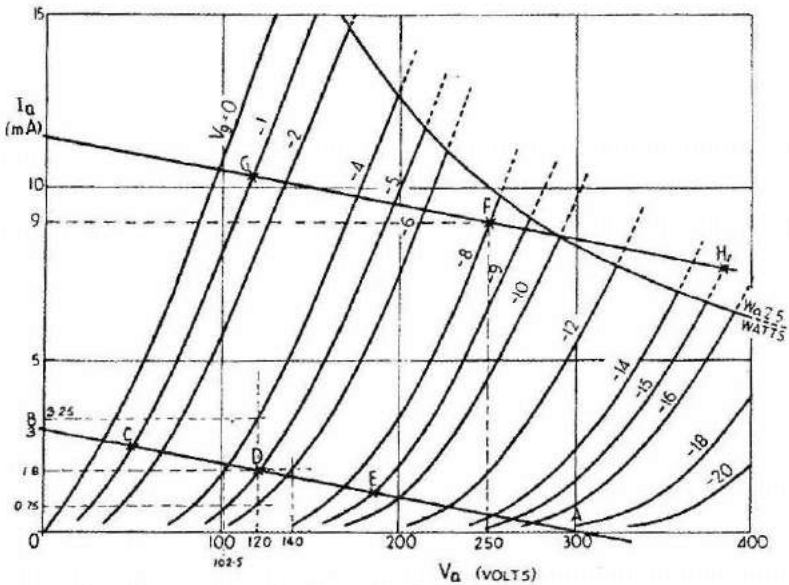

Fig. 2.

Typical characteristic curves I_a/V_a of a triode valve showing load lines when used as a voltage amplifier.

lowest frequency to be used, a suitable ratio being from one half to one quarter. The highest frequency to be used is relevant, because across R_a or R_o are the capacities of the anode of the amplifier valve, the input capacity of the succeeding valve and the wiring capacities. The sum of these capacities being in parallel with R_a (which is itself in parallel with the anode impedance of the valve r_a) will lower the effective anode load impedance and hence the gain of the stage. For audio frequencies with good high frequency response the value of R_a should not exceed 1 megohm and preferably be less, since the total capacity across it will vary from about 30 pF to possibly 100 pF, giving a shunt reactance of 500,000 ohms or less. The effect of the shunt capacities is more important if a pentode is used as the voltage amplifier than with a triode because the pentode anode impedance is much higher.

If the succeeding valve is a tetrode or pentode its input capacity will be less due to reduced "Miller" effect. If a pentode is employed the screen by-pass condenser C_{g_2} should have a value such that its reactance is low compared with the apparent screen impedance. This impedance is approximately the screen voltage V_{g_2} divided by the screen current I_{g_2}.

Triodes

In order to ascertain the values to be used with a triode valve the essential characteristic curve is that obtained by plotting anode current against anode voltage (I_a/V_a) a typical example of which is shown in Fig. 2.

Let it be assumed that the H.T. line voltage ($V_{a(b)}$) is 300 volts, the anode load resistor is 100,000 ohms and the succeeding valve grid leak 500,000 ohms. It is required to find a suitable value for the cathode resistor, the voltage amplification and maximum available output without distortion.

Since with a grid bias of more than cut-off value, the anode current will be zero, the voltage drop in the anode load R_a will be zero. Hence one end of the load line will be represented by 300 volts at point A and the slope of the line will be 100,000 ohms. Hence the other end will be at 3 mA at point B, and as we vary the grid voltage the anode voltage V_a will travel along this line A B. In general, the operating point will be such that the mean anode voltage V_a is between 0·4 and 0·5 times the H.T. line voltage. The anode voltage can thus swing above and below this value. The figure 0·4 should be used for triodes having an amplification factor lower than 40 and 0·5 for those having an amplification factor higher than 40 since the latter have a shorter grid base, and in consequence the operating point is closer to the point at which grid current starts. In the average type of valve grid current starts at just under 1 volt and therefore the grid voltage should never swing to the left beyond –1 volts (the point C on the curve). As these curves are those of a triode with a nominal amplification factor (μ) of 20, then 0·4 times 300 volts = 120 volts (point D on the curve). This corresponds to a grid bias of –5 volts and an anode current of 1·8 mA. Hence the cathode bias resistor value is 5,000/1·8 = 2,800 ohms. In practice 3,000 ohms could be used.

If we follow the vertical line up and down through point D we see that the anode current is 3·25 mA at –4 volts and 0·75 mA at –6 volts, hence for 2 volts change in grid voltage there is 2·5 mA change in anode current so that the mutual conductance at this point is 1·25 mA/V. If we follow a horizontal

line through point D either way we see that –4 volts corresponds to 102·5 volts and –6 volts corresponds to 140 volts. Thus 2 volts change in grid voltage is equal to 37·5 volts change in anode voltage. Hence the amplification factor (μ) at the operating point is 18·75.

From this it follows that the anode impedance is

$$\frac{18 \cdot 75}{1 \cdot 25} \times 1{,}000 = 15{,}000 \text{ ohms.}$$

The actual output load at audio frequencies is R_a in parallel with R_o which is 100,000 in parallel with 500,000 or 83,000 ohms.

The voltage gain is $\frac{\text{amplification factor } (\mu) \times \text{output load}}{\text{output load} + \text{anode impedance}}$ which is

$$\frac{18 \cdot 75 \times 83{,}000}{83{,}000 + 15{,}000} = 16.$$

Hence for every 1 volt R.M.S. applied to the grid we shall have 16 volts available for the succeeding valve.

Since the grid can only swing to point C as mentioned above, the peak input voltage is 4 volts so that the maximum output V_{out} is 64 volts peak or 45 volts R.M.S. The values of the condensers are chosen as mentioned in a preceding paragraph.

In order to calculate the distortion the voltage gain must be re-calculated in just the same way about the point C and also at the point E (–9 volts) which is at the equivalent distance on the other side of the bias voltage. These work out to be 16·3 at C and 14·3 at E, hence the positive peaks of the signal output will be amplified less than the negative peaks. Naturally if a smaller input swing is employed the distortion will be correspondingly less.

The input capacity of the stage will be the grid-cathode capacity plus the product of the grid-anode capacity and the voltage gain, which in the above case is very little less than the amplification factor.

Pentodes or Tetrodes

The choice of a pentode or tetrode, instead of a triode, will depend on the gain required and upon the load presented by the succeeding valve. Valves of these types, due to their much higher amplification factor, will give considerably more stage gain but in general will handle a smaller signal input without distortion. Their higher output impedance makes them unsuitable unless negative feed-back is applied, for driving any output stage that is operated other than strictly Class A1. These factors indicate that they are most suitable for early stages in a multistage amplifier, but in this connection it is as well to bear in mind that they also are inherently more noisy than triodes.

In order to determine the operating conditions the treatment has to be different from that of a triode because of the complications due to the valve performing as a constant current device and the additional factor of screen current.

As an example the anode current, anode voltage (I_a/V_a) curves for a typical pentode are shown in Fig. 3. The rated Class A amplifier conditions are V_a250, V_{g_2} 100, V_{g_1} –3. Using an anode load of say 500,000 ohms, the load line will be AB. It is evident that the anode voltage at the operating point C will be very low and further, the anode will be unable to swing downwards in a linear manner, although it will swing upwards.

These conditions, whilst desirable for a limiter are not those for a linear amplifier. The trouble in this example is that the screen voltage is too high. Fig. 4 shows I_a/V_a curves for the same valve with a screen voltage of 30 volts. The load line AB for 500,000 ohms gives the operating point of C at an anode voltage of 90 which is just under half the H.T. line voltage, with a grid voltage of $-1 \cdot 5$ volts. Under these conditions the valve would operate satisfactorily as an R.C.C. amplifier. It would appear that all that is required is a curve at the correct screen voltage, but the difficulty is that valve manufacturers do not supply a folder of curves at all values of low screen voltage.

The data required is a set of dynamic curves on which is plotted anode current against grid voltage for various screen voltages with given values of anode load. Such a curve for the above valve is shown in Fig. 5. This curve is plotted with an H.T. line voltage ($V_{a\,(b)}$) of 250 volts and an anode load (R_a) of 500,000 ohms. It will be noticed that for every screen voltage a curve is obtained, which has a straight portion in the centre, but is bent at either end, the slope of the curves getting progressively less as the screen voltage is increased. For every screen voltage there is a correct grid voltage, but for the best stage gain a grid voltage should be chosen such that the working part of the curve does not extend to the right beyond -1 volt because of grid current. From the above, the correct curve is that corresponding to a screen voltage of 30 volts. The operating point is approximately in the centre of the straight portion of this curve, corresponding to point A, the grid voltage

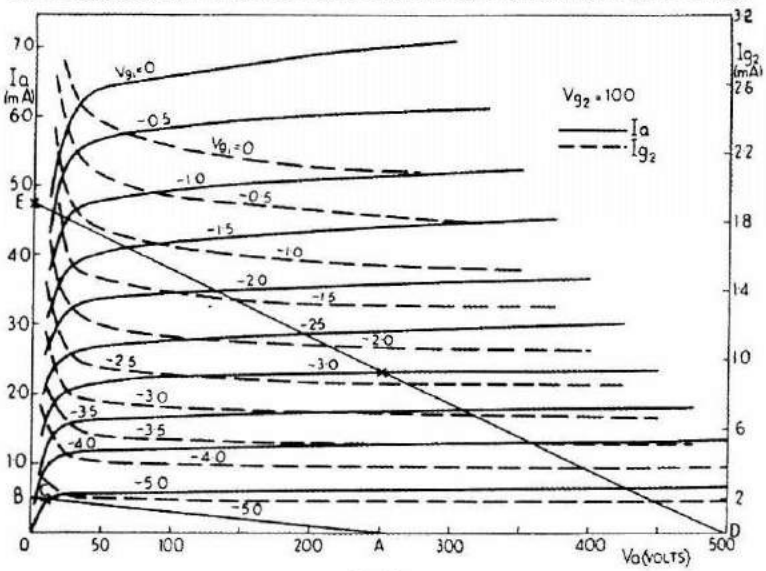

Fig. 3.
Typical characteristic curves I_a/V_a of a R.F. Pentode valve showing load lines when used as a voltage amplifier.

being $-1 \cdot 5$ volts, and the anode current $0 \cdot 31$ mA. Hence the anode voltage (V_a) is 94 volts. The dotted curves indicate the screen current, which at screen volts 30 and grid volts $-1 \cdot 5$ is $0 \cdot 085$ mA. Hence the bias resistor (R_k) is

$$\frac{\text{grid volts}}{\text{anode} + \text{screen current}} \text{ or } \frac{1 \cdot 5 \times 1{,}000}{0 \cdot 31 + 0 \cdot 085} = 3{,}800 \text{ ohms}$$

and the screen resistor (R_{g2}) is

$$\frac{\text{H.T. line voltage} - \text{screen voltage}}{\text{screen current}} \text{ or } \frac{250 - 30}{0 \cdot 085} \times 1{,}000 = 2 \cdot 6 \text{ megohms.}$$

Since the anode current is flowing through the load resistance there is a linear relation between the anode current and anode voltage. If points are taken either side of the working point such as grid volts $-1 \cdot 75$ and $-1 \cdot 25$ volts (points B and C) these correspond to anode currents of $0 \cdot 2$ mA and $0 \cdot 43$ mA, and (since these currents flow through the 500,000 ohms load) to anode voltages of 150 and 35 volts. Therefore a change of $0 \cdot 5$ volts on the grid produces 115 volts change in the anode voltage, hence the gain is 230 times. This figure of course, presumes that the cathode and screen are adequately decoupled as mentioned earlier. The net gain is less than this because, as in the triode case, the succeeding valve grid leak R_o has to be taken into account. If the grid leak R_o is taken as 1 megohm in this case, the gain will be reduced by $\frac{R_o}{R_o + R_a}$ or $\frac{1}{1 + 0 \cdot 5}$ or $0 \cdot 67$, *i.e.* the net gain is 154 times.

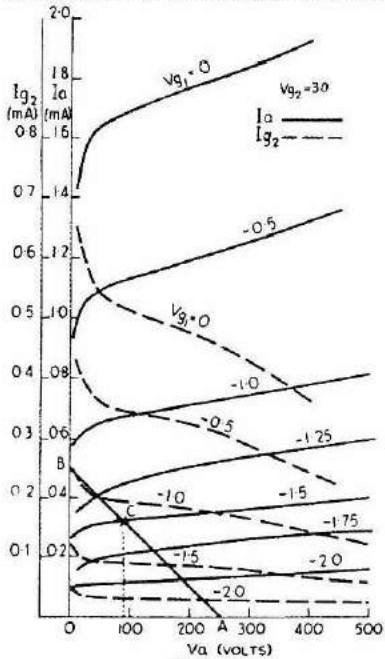

Fig. 4.
I_a/V_a characteristic curves for the R.F. Pentode shown in Fig. 3 but with screen voltage V_{g2} = 30 volts.

The maximum output we can achieve without excessive distortion is the linear part of the curve E F, which corresponds to a peak to peak anode current change of $0 \cdot 35$ mA, or 175 peak to peak voltage change or 62 volts R.M.S.

As a fairly reliable guide the maximum output voltage is obtained when the anode current is so chosen that it equals

$$\frac{0 \cdot 56 \times \text{H.T. line voltage } (V_{a\,(b)})}{\text{anode load resistor } (R_a)}$$

The distortion can be obtained in the same way as for triodes by working out the stage gain from the curves at the extremes of the grid swing, the anode impedance being neglected, as in general it is high compared with the likely values of anode load.

When such curves cannot be obtained from the valve manufacturer it is not difficult to set up a

suitable circuit and take curves of the anode current/grid voltage for a few selected screen voltages and from this data the operating point can be selected. The screen current may be measured at the operating point only, in order to determine the screen dropping resistor and the bias resistor.

Choke-Capacity Coupled Amplifiers

It is evident that if a choke is substituted for the anode load (R_a) in Fig. 1, the circuit will operate in the same manner, but since there will be little D.C. voltage drop in any well designed choke, the anode voltage will be equal to the H.T. line voltage ($V_{a(b)}$). Normally the impedance of the choke should be very high compared with the valve impedance (r_a) and the succeeding valve grid leak (R_g) over the whole frequency range at which it is desired to amplify. If this is not so then the load for the valve is reactive and the load line takes the form of an ellipse, which becomes a circle when the resistance of the grid leak is infinitely high compared with the reactance of the choke. The centre of the circle or ellipse is the normal operating point. This effect is caused by the self inductance of the choke causing the anode voltage to be out of phase with the current through the choke.

Normally, the above remarks only apply at the lower extremes of the frequency range where the reactance of the choke is falling rapidly or in certain special applications, such as television line time-base amplifiers, where the load due to the deflector coils is almost wholly reactive.

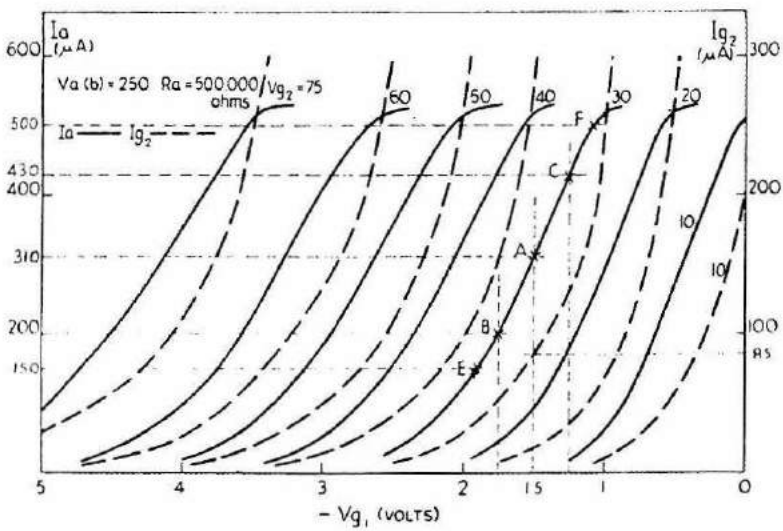

Fig. 5.
I_a/V_{g1} curves for the R.F. Pentode shown in Fig. 3 but plotted with an anode load R_a of 500,000 ohms and varying screen voltage V_{g2}.

Taking a practical case when the choke has an adequately high reactance and can be ignored, the load is then the grid leak of the succeeding stage, say 100,000 ohms. Then if the triode valve shown in Fig. 2 is used and an H.T. line voltage of 250 volts is employed, the anode voltage will be almost 250 volts if the D.C. drop in the choke is small. If the makers' rating for a Class A amplifier at this voltage is grid volts −8, then the operating point will be F and the load line GH is drawn with a slope of 100,000 ohms. This line extends to the right to a potential nearly equal to twice the H.T. line voltage, the source of this voltage being the magnetic field in the choke, which, when the anode current is falling, resists the fall in flux and in doing so induces in the winding a voltage which is additive to the supply voltage.

Since the grid bias is −8 volts, the maximum input swing is from −1 volts (G) to −15 volts (H). The mutual conductance at F determined in the manner described before, is 2·5 mA/V and the amplification factor 21, hence the anode impedance (r_a) is 8,300 ohms. The voltage gain is therefore

$$\frac{21 \times 100{,}000}{8{,}300 + 100{,}000} = 19{\cdot}4.$$

and since the voltage input swing is 14 volts peak-peak (or 5 volts R.M.S.) the output will be 97 volts R.M.S.

It is seen that the gain is higher than in the resistance-capacity coupled case and the output voltage is also increased. The cathode bias resistor is obviously 1,000 × 8/9 ohms or 900 ohms.

If, for example, the stage is used at audio frequencies and the choke is iron cored, its inductance will vary with frequency. Knowing this relation the gain at different frequencies we can calculate, and find the drop in gain at the low frequency end. The effective load will be the reactance of the choke in parallel with the grid leak of 100,000 ohms used in the example. It must be borne in mind that the reactance of the choke must be added *vectorially* not directly to the resistance.

When a pentode is used instead of a triode as a choke-capacity coupled stage, the procedure is the same as that for a triode, because we can now use the normal anode current/anode voltage curves, the anode voltage being equal to the H.T. line voltage. As an example, a load line DE has been drawn on the curves in Fig. 3 equivalent to a load of 100,000 ohms.

Tuned anode coupling, such as is used in the R. F. stages of a receiver, is a variation of a choke-capacity coupling. In this case, the choke is replaced by a tuned circuit whose dynamic resistance $\frac{\omega^2 L^2}{r}$ (or Reactance × "Q") may be treated as being in parallel with the succeeding valve grid leak, and the calculation becomes similar to that for a resistance-capacity coupled amplifier.

Transformer Coupled Amplifiers

When a transformer is used for coupling between stages the procedure is the same as for choke coupling. The transformer will merely step up the voltage from the primary into the secondary, thus increasing the stage gain by the radio of the transformer turns. For example, a 4 to 1 step up transformer used instead of a choke in Fig. 2 where the stage gain was shown to be 19·4, would increase the gain by four times to approximately 80 and the output voltage correspondingly. The output load is then the primary impedance of the transformer in parallel with the reflected secondary load. The reflected secondary load is the load on the secondary divided or multiplied

by the square of the primary to secondary turns-ratio depending upon whether the transformer is a step up or down ratio. Generally there is no resistive secondary load, but there may be considerable capacity load at the higher frequencies or there may be a grid current load in the case of a Class B or AB2 amplifier. The transformer used may be a tuned transformer such as an I.F. transformer, and similar procedure is used if the dynamic resistance of the transformer is known and used as the load for drawing the load line on the I_a/V_a curves. If the transformer is of high dynamic resistance allowance must be made for the effect of valve anode impedance on both the gain and the selectivity.

Wide-Band Amplifiers

For a number of purposes a voltage amplifier is required having a very wide band-width. Examples of such use are cathode ray oscilloscopes and television. These amplifiers may be of any of the types mentioned above, but generally they will use pentodes because of the increased gain and the greater stability afforded by the lower grid-anode capacitance.

Wide-Band Video Amplifiers

It will be remembered that frequency limitations are imposed on a resistance-coupled amplifier by the sizes of the coupling condensers at the low frequencies, and the capacity across the output load at the high frequencies. The low frequency gain may be maintained by the use of larger coupling condensers, but a limit is reached when these become unwieldy and it becomes difficult adequately to decouple the H.T. supply and cathode resistor at these low frequencies. If frequencies down to D.C. are required there is no alternative but direct coupling. It is not proposed here to deal with direct-coupled amplifiers because the treatment as regards the drawing of load lines and calculations of gain is not affected in any way by the method of coupling.

The high frequencies in a normal resistance coupled amplifier are attenuated by the capacities, so that using conventional resistor values the upper frequency limit is in the region of 25 kc/s. or lower. But if the values of the anode load (R_a) or succeeding valve grid leak (R_g) are lowered, then the shunt capacity becomes less important ; at the same time, of course, the voltage gain and output voltage are reduced.

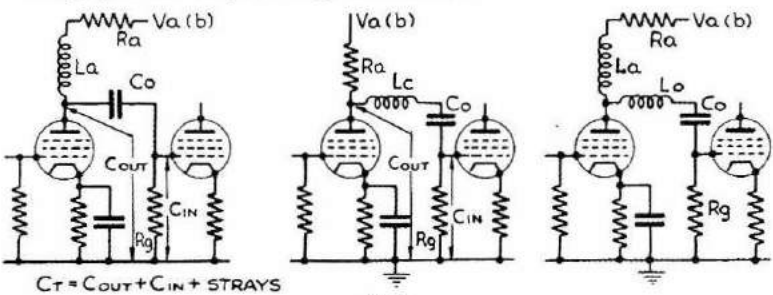

Fig. 6.
Three methods of overcoming the drop in high frequency response of wide band vidio amplifiers. (a) Shunt compensation. (b) Series compensation. (c) Shunt series compensation.

For this reason it is usual to employ pentodes having a very high mutual conductance of the order of 7·5–10 mA/V and even then the stage gain is not very great.

When a low anode load (R_a) is employed the voltage gain becomes nearly equal to the mutual conductance multiplied by the load, because the valve impedance is infinite by comparison. For example if R_a is 5,000 ohms, r_a is 0·3 megohm and g_m is 10 mA/V then the amplification factor μ is 3,000.

Voltage gain $= \dfrac{3{,}000 \times 5{,}000}{5{,}000 + 300{,}000}$ which is nearly $\dfrac{3{,}000 \times 5{,}000}{300{,}000}$ or 50

and as $\dfrac{\mu}{r_a} = g_m$, the expression $= g_m \times R_a$ applies. Obviously, since the capacities across the load are the output capacity of the valve, the input capacity of the succeeding valve and the circuit strays, it is desirable for these to be as low as possible and the best valves to use for wide band-width are those having the highest ratio of g_m to capacity. The upper frequency limit (f_{max}) with R.C. coupling is usually defined as the point at which the response is 0·707 of the value of the level response at lower frequencies and this occurs when $R_a = \dfrac{1}{2\pi f_{max} C_t}$ where C_t is the total capacity across the load in Farads.

For example, using a R.F. pentode having a slope of 7·5 mA/V and an input capacity c_{in} of 7·5 pF an output capacity c_{out} of 3·5 pF and assuming circuit strays of 5pF with an anode load of 3,300 ohms, the voltage gain will be $\dfrac{7{\cdot}5 \times 3{,}300}{1{,}000} = 25$, and the maximum frequency

$$f_{max} = \frac{10^{12}}{2\pi \times 3{,}300 \times 16} = 3 \text{ Mc/s.}$$

If the valve capacities or the strays were higher (for example a total of 25pF) the maximum frequency would be reduced to 1·9 Mc/s.

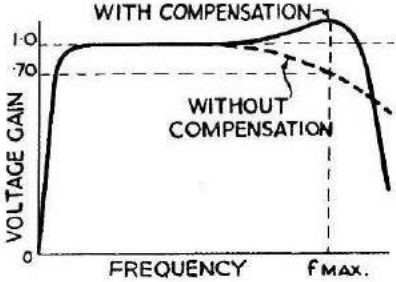

Fig. 7.
Curves of the frequency response of a wide-band vidio amplifier with and without compensation.

The effect of the capacities may be reduced by using a small amount of inductance in the load circuit. The three methods of achieving this are known as " Shunt compensation (Fig. 6a), " Series compensation " (Fig. 6b), and " Shunt-series compensation " (Fig. 6c). The curves shown in Fig. 7

indicate the response with and without compensation. The design figures for each are as follows :—

" Shunt "

$$R_a = \frac{1}{2\pi \times f_{max} \times C_t}$$

where R_a is in ohms f_{max} is in cycles C_t is in farads.

$$L_a = 0{\cdot}5 \times C_t \times R_a^2$$ where L_a is in henrys.

Relative gain at $f_{max} = 1{\cdot}0$.

" Series "

($2 \times c_{out}$ should be adjusted to equal c_{in})

$$R_a = \frac{1{\cdot}5}{2\pi \times f_{max} \times C_t}$$

$$L_c = 0{\cdot}67 \times C_t \times R_a^2$$

Relative gain at $f_{max} = 1{\cdot}5$.

" Shunt-Series "

($2 \times c_{out}$ should be adjusted to equal c_{in})

$$R_a = \frac{1{\cdot}8}{2\pi \times f_{max} \times C_t}$$

$$L_a = 0{\cdot}12 \times C_t \times R_a^2$$

$$L_c = 0{\cdot}52 \times C_t \times R_a^2$$

Relative gain at $f_{max} = 1{\cdot}8$.

The frequency response may also be improved in the usual manner by the use of negative feed-back. In general this allows for the use of higher values of anode load but the feed-back reduces the gain to a figure of the same order as described above. The response to wave shapes other than sine waves, however, is improved.

Wide-Band R.F. Amplifiers

These amplifiers generally employ either tuned anode, tuned grid or transformer coupling, but the tuned circuits are loaded with low values of parallel resistance. The tuning capacity is generally provided solely by the input and output capacities of the valves plus the stray capacities.

Two typical examples of circuit are shown in Fig. 8a and 8b. In Fig. 8a the inductance is in the grid circuit (L_g) the resistance loading being the anode load (R_a). In Fig. 8b the inductance is in the anode circuit the resistance loading being the grid leak (R_g). In both cases the tuning capacity is the total of $c_{in} + c_{out}$, and strays or C_t. The value of the coupling condenser C_o is such that its reactance is negligible at the mid-frequency point.

The band-width of either of these circuits for a response of 30 per cent. down at the band edges

$$2\Delta f = f_r \frac{\sqrt{L/C_t}}{R} \text{ c.p.s.}$$

where f_r is the mid-frequency resonance in Mc/s.

L = inductance of L_a or L_g in microhenrys.

C_t = total capacity in microfarads.

$2\Delta f$ = total band-width in cycles.

R = anode load (R_a) or grid leak (R_g).

The voltage gain at the mid-frequency is approximately that which would be obtained with an anode load of R by itself, *i.e.* $g_m \cdot R$.

When a wide-band R.F. or I.F. transformer is employed the voltage gain is approximately half the above value, if R is taken as the load resistance across the primary of the transformer.

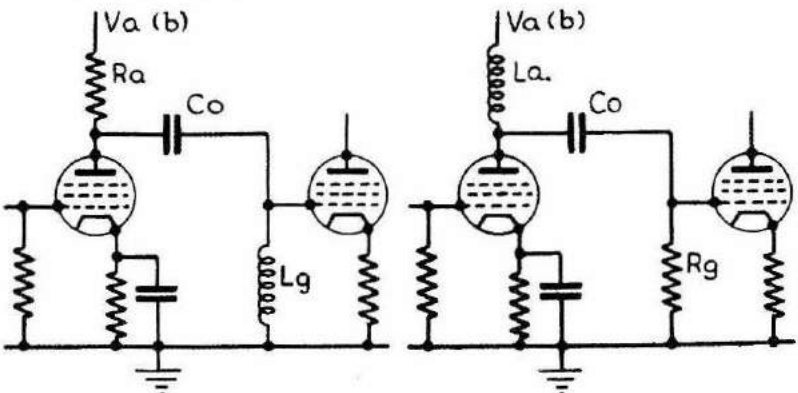

Fig. 8.
Two typical circuits for wide band R.F. amplifiers. (a) Using tuned grid coupling. (b) Using tuned anode coupling.

Use of Characteristic Curves

In order to determine the output voltage and distortion in wide-band amplifiers the same procedure is followed in all respects as described previously for resistance-capacity coupled or choke-capacity coupled amplifiers, but since the values of anode load resistor (R_a) are generally very small the anode voltage (V_a) is almost equal to the H.T. line voltage ($V_{a(b)}$). Hence for pentodes, dynamic curves or low screen voltage curves are not necessary.

CHAPTER 3 AUDIO FREQUENCY POWER AMPLIFIERS

The Five Point Method of Design

THE most essential characteristic curves for the design of the audio output stage are those showing the relationship between anode voltage and anode current at various No. 1 grid (control grid) potentials. In the case of pentodes and tetrodes the No. 2 grid (screen) potential is assumed constant and its current is often shown as well. Fig. 9a shows typical curves for a triode and Fig. 9b those of a pentode.

The "working point" is determined by finding the intersection of the vertical line through the anode supply voltage with the appropriate bias curve. The corresponding value of anode current may then be read off the anode current scale.

The load into which the valve works may be represented by a straight line, for resistive loads, passing through the working point, and having a slope equal to the reciprocal of the resistance in kilo-ohms. (assuming curves are plotted in volts and milliamperes).

In order to calculate power output and harmonic distortion, five special points must be determined. These are the intersections of the load line with the I_a V_a characteristics for certain grid potentials corresponding to the bias point, the bias point plus and minus half the peak grid swing and the bias point plus and minus the peak grid swing. Usually the bias point plus the peak grid swing will be equal to zero. These lines are shown drawn in on Fig. 10, together with a load line. Certain dimensions (capital letters for

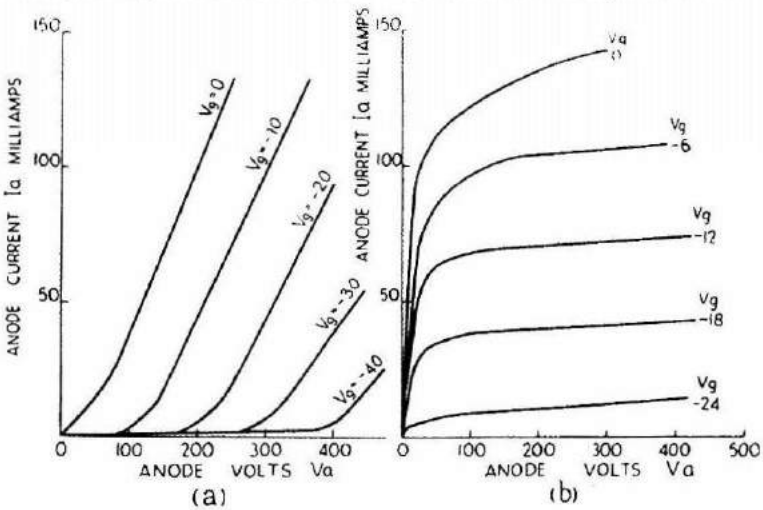

Fig. 9.
Typical I_a/V_g curves for an output valve. (a) Triode. (b) Pentode.

milliamperes, small letters for volts) can then be obtained, and from these, by use of the formula, all the information likely to be needed can be calculated. A little practice will soon enable a designer to select the most likely working point and the best load impedance for a given case. Slight variations of the values can be checked with the formula, to ensure that optimum conditions have been selected.

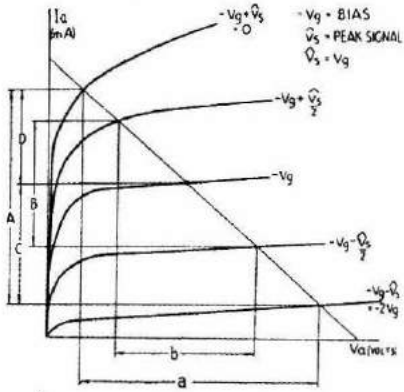

POWER OUTPUT

FUNDAMENTAL ONLY..... $\frac{Aa}{8}$ MILLIWATTS

WITH HARMONICS..... $\frac{(A+B)(a+b)}{16}$ MILLIWATTS

% SECOND HARMONIC.... $\frac{3(D-C)}{4(A+B)} \times 100\%$

% THIRD HARMONIC.... $\frac{A-2B}{2(A+B)} \times 100\%$

Fig. 10.
Load line drawn on typical pentode characteristics showing dimensions required to calculate output and harmonic distortion.

Class A. Single Valve

This case was illustrated in the foregoing section. It should be noted that the grid is never driven positive and, as no grid current flows, the previous stage need not supply power. The excursions of the anode current are equal either side of the no-signal value and no change of mean anode current should occur when a signal is applied. The no-signal dissipation will be given by the product of anode voltage and current at the working point, which must not exceed the makers' figures. The on-load dissipation will be this same figure minus the output power.

During a complete cycle of operation the anode potential traverses the whole of the load line, and at one point the anode reaches a potential nearly twice that of the supply voltage. The source of this additional voltage is the magnetic field in the core of the output transformer or choke, which, while the anode current is falling, collapses and induces in the winding a voltage which is additive to the supply voltage.

Were no choke or output transformer in use, the high tension supply voltage would have to be raised to the value indicated by the intersection of the load line with the anode voltage scale, to achieve the same working conditions.

Two Valves in Push-pull, Class A.

In this case it is necessary to construct composite characteristic curves representing the combination of the two valves, as shown in Fig. 11, and to apply the five point method as before. If the valves are assumed to have a fixed bias of −12v, and a signal of 12 volts peak per valve is applied, the corresponding pairs of grid voltages and the five relevant instants are shown in Table 1.

TABLE 1.

Instant	Grid Volts Valve No. 1.	Grid Volts Valve No. 2.
1	0	−24
2	−6	−18
3	−12	−12
4	−18	−6
5	−24	0

The characteristic curves of the two valves are combined by inverting one, so that the zero anode current lines are superimposed with the working anode voltages coincident. By algebraically adding the curves corresponding to the pairs of grid voltages given in Table 1 the composite curves may be constructed. For example, point A on the composite characteristic (drawn heavily), is obtained by adding the vertical dimensions x and y, y being negative and greater than x. The algebraic sum is $-(y-x)$ which being negative, is plotted below the horizontal axis.

The working point is the intersection of a vertical line through the working anode voltage with the centre line of the five composite curves. This will also lie on the horizontal axis, if the two valves are identical.

The load line may be drawn as before, the reciprocal of the slope representing the load applied to the composite generator. The five points are thus obtainable, but in extracting the necessary data to apply the formula it is better to make the measurements in linear units, and convert these to volts and milliamperes by the scale of the diagram, to avoid confusion arising over the negative values. The equivalent load on each of the individual valves can be obtained by drawing vertical lines through the five intersection points of the composite load line and the composite characteristics. Where these vertical lines cut the individual valve characteristic are points on the load line of the separate valves. (See A1, B1, C1, D1, E1, and A2, B2, C2, D2, E2 of Fig. 11). The slope of the individual load line is half that of the composite one indicating that the individual valve load is twice that of the composite generator. The anode-to-anode load will be four times that of the composite generator. This is shown another way in Fig. 12a, b and c, and may be taken as a general rule to be applied in all push-pull cases. If any operating condition other than pure Class A is examined, it will be found that the individual load lines are not straight.

Two Valves in Push-pull, Class AB1.

It is possible to attain a higher efficiency, still without positive grid drive, by over-biasing the valves, compared to the Class A bias. Under conditions of low signal level the anode current is reduced but increases as the signal increases. The degree of over-bias may vary from something barely distinguishable

from Class A to the "quiescent push-pull" condition when both valves, in the absence of a signal, are almost biased to cut off.

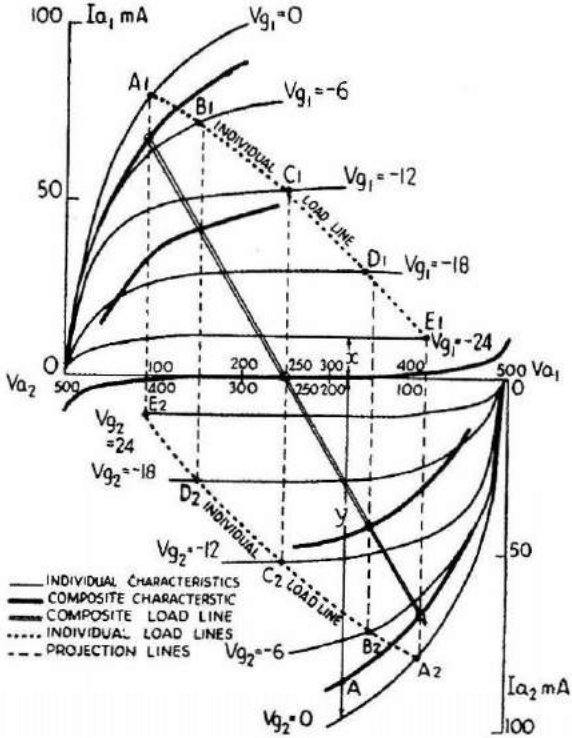

Fig. 11.
Composite diagram for a pair of pentodes in Class A, push-pull.

These conditions are illustrated for the case of a pair of imaginary triodes. One condition (Fig. 13a) assumes a bias of –22 and the other (Fig. 13b) of –30 volts. The corresponding "pairs of grid bias lines" are shown in Table 2.

The curved load lines of the individual valve characteristics will be noted, the curvature increasing with increase in standing bias. The composite characteristics, it will be observed, approach more closely the individual characteristics as the bias is raised, and in some applications this renders construction of the whole composite diagram unnecessary. Figures may be worked out by making the load line cut the working voltage at zero anode current and assuming symmetry about this point.

The dissipation under no-load conditions corresponds to the current and voltage values indicated by the centre point of the curved individual load line; the on-load dissipation however is harder to deduce. If apparatus is available the dissipation may, of course, be determined by measurement of

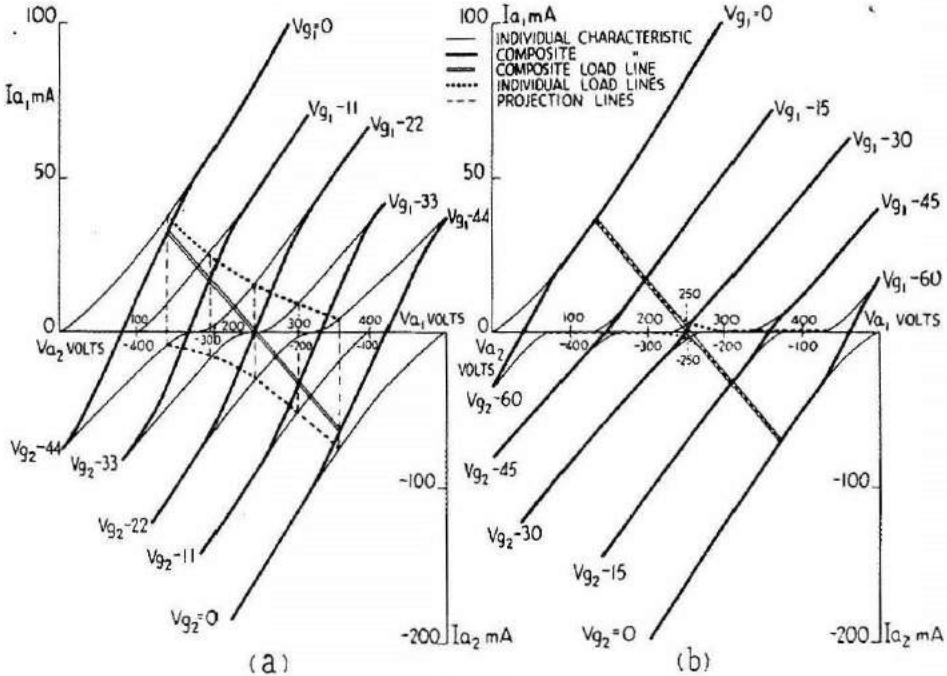

Fig. 13.
Composite diagrams for a pair of triodes in Class AB1 push-pull. (a) with a grid bias of — 22 volts. (b) with a grid bias of — 30 volts.

the input and calculation or measurement of the output, the total dissipation for both valves being the difference between these values. A calculated solution may be obtained as follows. First determine the instantaneous grid voltage at every 30° of one complete grid drive cycle of 360°. Second locate intersections of each of these grid bias lines with the curved load line and calculate the product of current and voltage corresponding to the intersections. Add the products and divide the sum by 12. For greater accuracy use 15° intervals for the grid drive voltage and divide by 24.

TABLE 2.

Instant.	Bias -22v. Signal 22 volts peak		Bias -30v. Signal 30 volts peak.	
	Valve 1.	Valve 2.	Valve 1.	Valve 2.
1	0	-44	0	-60
2	-11	-33	-15	-45
3	-22	-22	-30	-30
4	-33	-11	-45	-15
5	-44	0	-60	0

Two Valves in Push-pull, Class AB2.

Both Class AB2 and Class B differ from the previous examples because the peak grid drive voltage is greater than the standing bias and the valves are driven into the positive grid region. Because of the grid current, the previous stage, now known as the driver, has to supply power and itself has to be designed as a small output stage. Class AB2 is only a special case of Class AB1 in which the drive is taken beyond the zero grid voltage point to perhaps +10 volts. The "pairs of bias" lines may then be, for example, as shown in Table 3. Providing the anode-current, anode-voltage curves for the positive values are available,

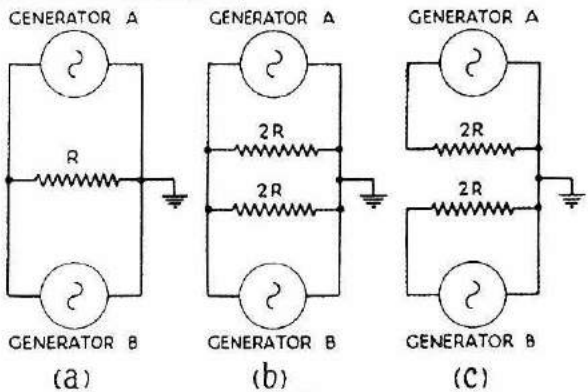

Fig. 12.
Illustrating the relationship between individual load, composite load and anode-to-anode load for a pair of valves Class A1 in push-pull. (*a*) Load on composite generator = *R*. (*b*) Two parallel resistors each 2 x *R*. Load identical to (*a*). (c) Two parallel resistors each 2 x *R* but fed from individual generators. Generator to generator impedance = 4 x *R*.

TABLE 3.

Instant.	Bias −30, Signal 40 volts peak.	
	Valve No. 1.	Valve No. 2.
1	+10	−70
2	−10	−50
3	−30	−30
4	−50	−10
5	−70	+10

the design of the stage proceeds exactly as before. At the instant of peak positive grid voltage, the sum of the anode and grid currents (screen current as well in the case of tetrodes or pentodes) must not exceed the permissible peak emission figure of the valve.

Two Valves in Push-pull, Class B.

It will be noted that in the Class AB2 case grid current flows for only a small fraction of each cycle, but some valves are designed to run into grid current for nearly a half cycle so that the push-pull pair draw grid current almost continually. This is the Class B condition. The valves, usually triodes, are designed to have low anode current consumption at zero or slightly negative voltage, and because the running condition is near to cut-off only one set of curves need be considered.

Fig. 14 shows the characteristics of a typical valve, the pairs of load lines being assumed to be as shown in Table 4. Three of the five points, marked A, B, C, are shown, the other two are assumed to be symmetrical about C.

TABLE 4.

Instant.	Bias −5, Signal 30v. peak.	
	Valve 1.	Valve 2.
1	+25	−35
2	+10	−20
3	−5	−5
4	−20	+10
5	−35	+25

Note also the grid current lines. At the plus 25 voltage instant the grid current is 23 milliamperes and the anode current 77 milliamperes. The peak demand is therefore 100 milliamperes.

The Driver Stage

In order to determine the operating conditions of the driver stage, two factors must be extracted from the grid current line corresponding to the peak positive drive voltage. They are the peak grid current, already noted to be 23 milliamperes, and the peak grid voltage from the bias point, which is not 25 volts but 25 − (− 5) *i.e.* 30 volts.

The total drive power, for two valves is equal to one half the peak drive volts (from bias point) multiplied by the peak grid current.

The load impedance of the grid circuit is equal to the peak grid voltage divided by the peak grid current flowing through one half of the secondary of the driver transformer at a time.

Driver transformer ratio (total primary to total secondary)

$$= \frac{1}{2}\sqrt{\frac{\text{Optimum load of driver} \times \text{peak grid current}}{\text{Peak grid voltage}}}$$

This method is equally applicable to determining the driver stage conditions of a Class AB2 amplifier. The above information concerning the driver takes no account of the regulation of the driver stage, and for good quality this regulation must be good, *i.e.* the output voltage must not vary when the valve is required to deliver power to the next stage. This in turn demands a driver transformer of low D.C. resistance and a driver stage of low output impedance.

Output Impedance

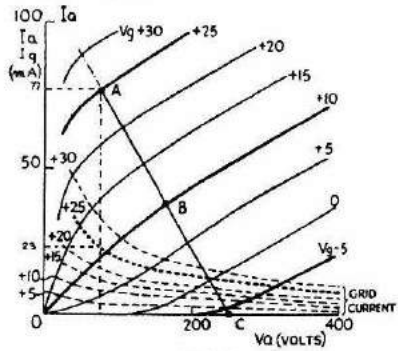

Fig. 14.
Anode current and grid current curves for one triode of a Class "B" push-pull pair.

The output valve may be regarded as an A.C. generator, of internal resistance r_a, working into a load represented by the output transformer and loudspeaker (or other load). This generator "sees" a load equivalent to the A.C. resistance of the loudspeaker speech-coil multiplied by the square of the step-down transformer ratio. The generator's internal impedance, or output impedance, is the reciprocal of the slope of the I_a/V_a curve at the working point, or the working point transferred to the individual characteristics in the case of push-pull pairs. The more nearly vertical the tangent the lower the impedance.

It can be seen, therefore, that pentodes have higher output impedances than triodes, and that Class AB and Class B stages are higher than Class A, since the working points of the AB and B stages are at lower current levels and, in consequence, are generally on portions of the *Va/Ia* curves that bend round towards the horizontal. In all cases, output impedances may be lowered by use of a suitable form of negative feed-back.

In order to ensure low output impedance and, therefore, improved regulation, Class AB2 and Class B driver stages are almost always push-pull triodes, but the best possible driver stage is a push-pull cathode follower, which may be regarded as a pair of triode valves with 100 per cent. negative feedback. This refinement is not usually necessary for output stages delivering 100 watts or less.

The output impedance of the audio stage is not usually of importance when the amplifier is used as a modulator, but if it is to be used with a loud speaker, a low output impedance will be found to have a marked effect in damping loud speaker resonances and generally assures a more constant output across the frequency spectrum. The object should be to make the ratio of load impedance to output impedance as high as possible with a minimum of four to one for the best quality. Push-pull triodes Class A or Class AB1 with some negative feedback have never been surpassed for high quality reproduction, nor does it seem likely that they will be, although pentodes, if sufficient feedback is used, can be made as good.

CHAPTER 4 RADIO FREQUENCY POWER AMPLIFIERS, FREQUENCY MULTIPLIERS AND OSCILLATORS

THE following additional symbols are used in this Chapter.

$v_a\,(pk)$	.. ..	Peak anode voltage.
$v_g\,(pk)$	.. ..	Peak grid voltage.
$v_g\,(max)$	.. ..	Maximum positive grid voltage.
$v_a\,(min)$	.. ..	Minimum anode voltage.
$i_a\,(pk)$	.. ..	Peak anode current.
$i_g\,(pk)$	.. ..	Peak grid current.
'	.. .. ..	Indicates a value at the modulation crest, *e.g.* V_a'.
2θ	.. .. ..	The angle during which anode current flows.

$$K_1 = \frac{1}{1 - \cos\theta} \qquad \text{(see Fig. 18)}$$

$$K_2 = K_1 - 1$$

$$K_3 = \frac{i_a\,(pk)}{I_a} \qquad \text{(see Fig. 18)}$$

$$K_4 = \frac{W_{out}}{I_a \times v_a\,(pk)} \qquad \text{(see Fig. 19)}$$

R.F. POWER AMPLIFIERS

In an R.F. power amplifier, the anode current consists of a series of pulses which may occupy between 40° and 180° of each complete R.F. cycle of 360°, depending on the characteristics of the valve and the purpose for which it is used. The operating conditions can rarely be calculated precisely, but an accuracy is obtainable which is sufficient to permit of intelligent transmitter adjustment. For all power amplifier design, valve characteristic curves extending into the positive grid region showing anode and grid currents are required. Curves of a typical triode valve are shown in Figs. 16 and 17 and these are used in the worked examples.

Fundamental Relationships

Fig. 15a shows a skeleton circuit for a triode power amplifier and Fig. 15b the relationship between the various voltages and currents in this circuit. It should be particularly noted that the peak value of anode current is drawn at an instant when the anode voltage has reached a low value and the grid voltage has reached a maximum positive value. In designing an amplifier this point has to be selected on the I_a/V_a and I_g/V_a curves. The anode voltage should never be allowed to fall below the value of the positive grid voltage as this results in excessive driving power being required

and may damage the grid of the valve; on the other hand, the efficiency will be greater when the anode voltage swings down to a very low value. With practice, it becomes easy to select a suitable working point by inspection of the valve characteristics; until skill is obtained, the value of minimum anode voltage may be taken as 20 per cent. of the D.C. anode voltage for initial calculations.

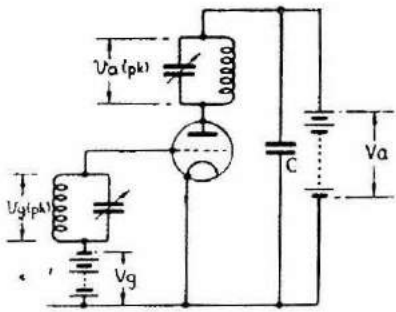

Fig. 15a.
Basic circuit of Class C amplifier.

Fig. 15c shows the conditions when anode modulation is applied to the amplifier. Modulation is accomplished by varying the anode voltage; at the crest of modulation the anode voltage is doubled and the peak R.F. anode voltage is also doubled. Normally the peak value of the R.F. grid voltage is unchanged since no modulation is applied to the driver stage; since the peak anode current is increased at the modulation crest, a greater value of positive grid voltage is required. This is achieved by reducing the value of D.C. grid bias or occasionally by applying some modulation to the driver.

Fig. 15d shows the conditions when grid modulation is applied. At the crest of modulation the anode voltage will swing down to a value approaching the positive grid voltage similar to the conditions for Class C telegraphy but since the bias with no modulation is increased the positive grid voltage, peak anode current and the anode voltage swing, are all reduced. Modulation is accomplished by effectively varying this bias. The peak grid voltage supplied from the driver must not vary during the modulation cycle in spite of the variation in driving power that is required.

When designing a power amplifier, it is necessary to decide during what part of each cycle the anode current shall flow. In general short angles of flow produce high efficiencies but demand greater driving power and take greater peak emission from the cathode of the valve than do large angles. This may result in reduced valve life. The angle can be chosen for each individual case bearing those factors in mind; in the design

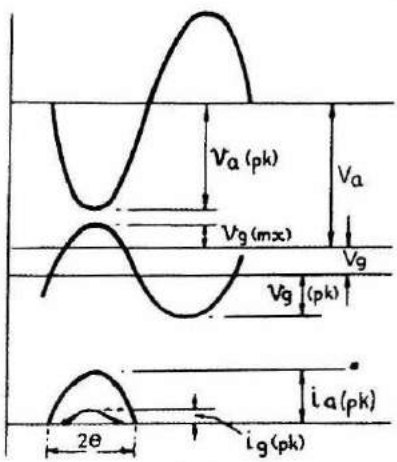

Fig. 15b.
Phase relationship in an unmodulated Class C amplifier.

data that follows, typical angles have been chosen and these may be adopted for most normal applications. It should be noted that the angle " θ " used in the design curves of Figs. 18 and 19 is one-half of the angle of flow; this is done to simplify the formulæ.

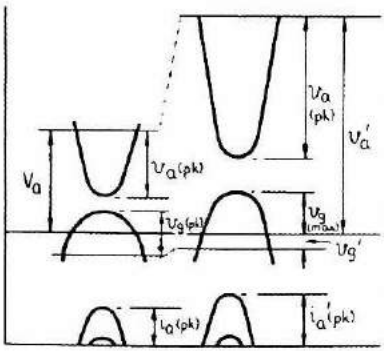

Fig. 15c.
Phase relationship at the carrier and modulation crest for an anode modulated Class C amplifier.

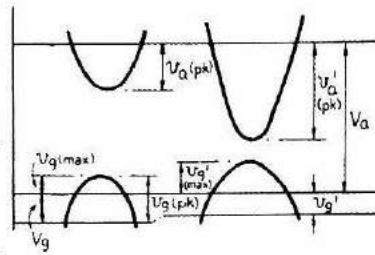

Fig. 15d.
Phase relationship at the carrier and modulation crest for a grid modulated Class C amplifier.

The following sections indicate the design procedure for Class C amplifiers for telegraphy, anode modulation, grid modulation and for frequency multiplication. Each section concludes with a summary in which the various calculated values are rounded off so as to indicate practical values.

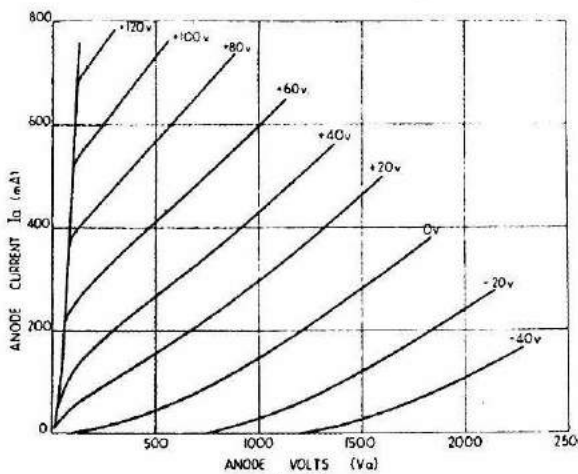

Fig. 16.
I_a/V_a characteristics for a typical transmitting triode.

Class C. Telegraphy

It is first necessary to decide the values of V_a and I_a, the product of which is the anode input. This is, of course, limited by the power that the station is licensed to use. Consider the valve whose characteristics are shown in Figs. 16 and 17; it is a triode of amplification factor (μ) 30 whose maximum ratings are $V_a = 1{,}200$ volts, $I_a = 125$mA, anode dissipation (W_a) = 40 watts. The maximum input will be: $1{,}200 \times 0{\cdot}125 = 150$ watts which is the usual maximum for an amateur station.

The design equations are:—

$$i_{a\,(pk)} = K_3 \times I_a \quad \ldots\ldots (1)$$

$$v_{a\,(pk)} = V_a - v_{a\,(min)} \quad \ldots\ldots (2)$$

$$W_{out} = K_4 \times I_a \times v_{a\,(pk)} \quad \ldots\ldots (3)$$

$$Vg = K_2 \left\{ -v_{g\,(max)} + \frac{v_{a\,(pk)}}{\mu} \right\} - K_1 \times \frac{V_a}{\mu} \quad \ldots\ldots (4)$$

$$Za = \frac{v_{a\,(pk)}}{2 \times I_a \times K_1} \quad \ldots\ldots (5)$$

A normal angle of flow for Class C telegraphy is 130°, so that $\theta = 65°$. For this angle, the four design factors can be obtained from Figs. 18 and 19 and are as follows:—

$K_1 = 1{\cdot}75$; $K_2 = 0{\cdot}75$; $K_3 = 4{\cdot}3$; $K_4 = 0{\cdot}88$.

From equation (1) $i_{a\,(pk)} = 4{\cdot}3 \times 125 = 540$ mA.

This is drawn at a low value of anode voltage such as 200 volts requiring a positive grid excursion of + 95 volts and producing a peak grid current of 110 mA. These figures are found from the characteristic curves.

From equation (2) $v_{a\,(pk)} = 1{,}200 - 200 = 1{,}000$ volts.

From equation (3) $W_{out} = 0{\cdot}88 \times 0{\cdot}125 \times 1{,}000 = 110$ watts.

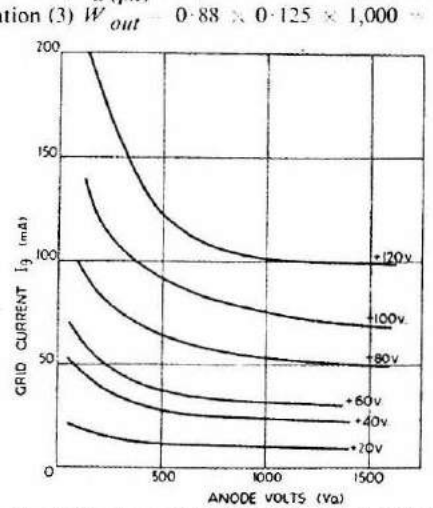

Fig. 17.—Corresponding I_g/V_a characteristics for the transmitting triode shown in Fig. 16.

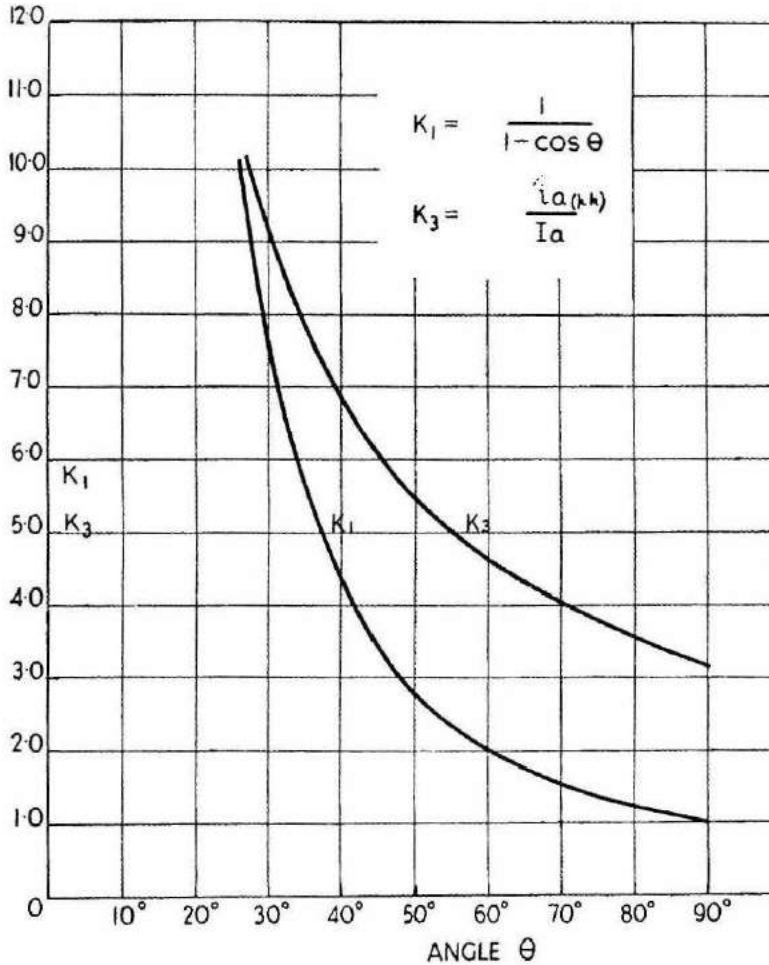

Fig. 18.
Values of the constants K_1 and K_3 for various angles of flow.

Subtracting this from the anode input, it is found that the anode dissipation is not exceeded.

From equation (4)

$$V_g = 0{\cdot}75 \times \left(-95 + \frac{1{,}000}{30}\right) - 1{\cdot}75 \times \frac{1{,}200}{30} = -117 \text{ volts.}$$

The peak grid swing $v_{g\,(pk)} = 117 + 95 = 212$ volts.

The ratio $\frac{V_g}{v_{g\,(pk)}} = \frac{117}{212} = 0{\cdot}55$ and referring this to Fig. 20 we find the ratio of peak to D.C. grid current is 7·1

$$\text{whence } I_g = \frac{110}{7{\cdot}1} = 16 \text{ mA.}$$

The driving power required is given by the product of D.C. grid current and peak grid swing $= 0{\cdot}016 \times 212 = 3{\cdot}5$ watts. The driver stage should pro-

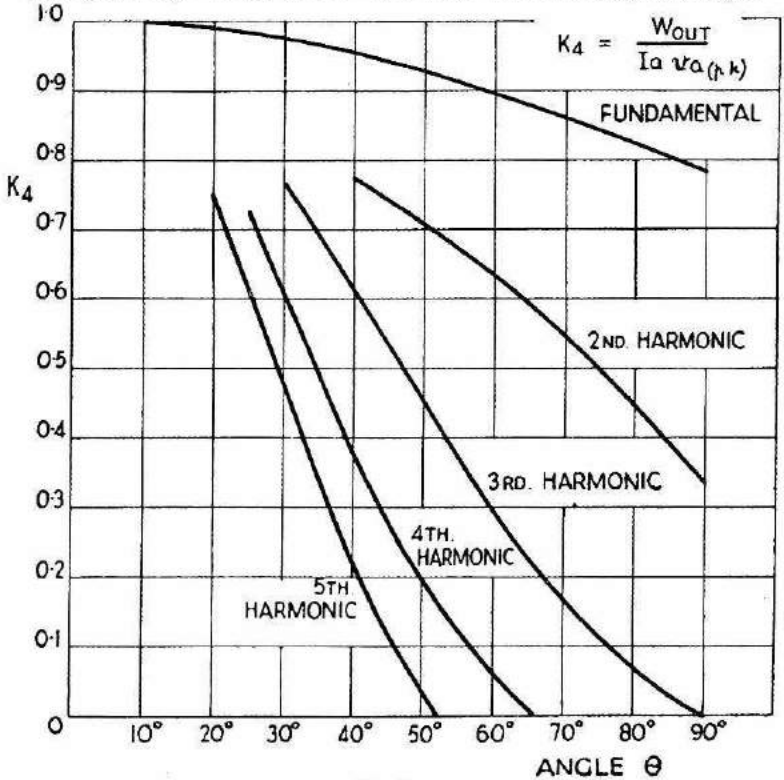

Fig. 19.
Values of the constant K_4 for various angles of flow utilising the fundamental and various harmonics.

duce considerably more power than this to allow for losses in the coupling system.

From equation (5) $Z_a = \frac{1{,}000}{2 \times 0{\cdot}125 \times 0{\cdot}88} = 4{,}550$ ohms.

Summarising the design—

(1) the anode supply will be 1,200 volts at 125 mA;
(2) the grid bias will be −120 volts;
(3) the previous stage should give an output of about 6 watts and the inter-stage coupling should produce 215 volts peak at the amplifier grid;
(4) the output will be 110 watts, less the loss in the tuned circuit.
(5) the anode tuned circuit, when loaded by the aerial should present a load of 4,500 ohms.

The design of practical tuned circuits is dealt with in a later section.

Anode-modulated Class C. Telephony

Valve makers usually quote ratings for their products under anode-modulated conditions but if only Class C telegraphy ratings are known, it is sufficient to reduce the anode voltage and current to 80 per cent., and the anode dissipation to 65 per cent. of the maximum values allowed for Class C telegraphy.

For our example, the ratings become:—

$V_a = 1{,}200 \times 0{\cdot}8 = 960$ volts (say 1,000 volts)

$I_a = 125 \times 0{\cdot}8 = 100$ mA

Anode dissipation $(W_a) = 40 \times 0{\cdot}65 = 26$ watts.

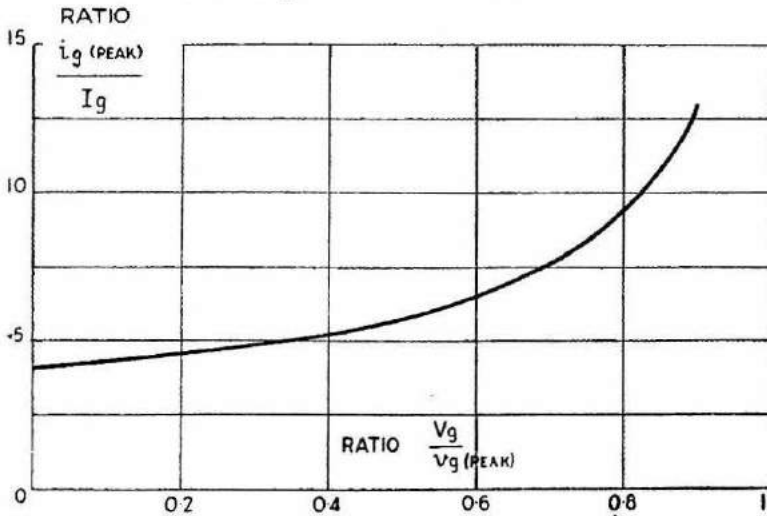

Fig. 20.
A curve to determine the value of D.C. grid current as based on the analysis of a squared sine wave.

The early part of the design follows along exactly the same lines as the calculation for Class C telegraphy.

A normal angle of anode current flow at the carrier is 120° so that $\theta = 60°$ and the design factors are $K_1 = 2 \cdot 0$; $K_2 = 1 \cdot 0$; $K_3 = 4 \cdot 6$; $K_4 = 0 \cdot 9$.

From equation (1) $i_{a\,(pk)} = 4 \cdot 6 \times 100 = 460$ mA.

The value of $v_{a\,min}$ (120 volts) is selected from the curves whence

$$v_{g\,max} = +75 \text{ volts}$$

and the peak grid current = 85 mA.

From equation (2) $v_{a\,(pk)} = 1{,}000 - 120 = 880$ volts.

From equation (3) $W_{out} = 0 \cdot 9 \times 0 \cdot 100 \times 880 = 80$ watts.

From equation (4) $V_g = 1 \cdot 0\left(-75 + \frac{800}{30}\right) - 2 \cdot 0 \times \frac{1{,}000}{30} = -112$ volts.

The peak grid swing $v_{g\,(pk)} = 112 + 75 = 187$ volts.

The ratio $\frac{V_g}{v_{g\,(pk)}} = \frac{112}{187} = 0 \cdot 6$ and from Fig. 20 we find the ratio of peak to D.C. grid current $= 6 \cdot 5$ whence $I_g = \frac{85}{6 \cdot 5} = 13$ mA. The driving power $= 0 \cdot 013 \times 112 = 1 \cdot 5$ watts.

From equation (5) $Z_a = \frac{880}{2 \times 0 \cdot 100 \times 0 \cdot 90} = 4{,}900$ ohms.

In order to ensure that full modulation is possible, the conditions at the modulation crest should be checked.

A typical angle of flow at the crest is 180° so that $\theta = 90°$ and the design factors are $K_3' = 3 \cdot 14$; $K_4' = 0 \cdot 785$. The anode voltage at the crest will be doubled, *i.e.* $V_a' = 2{,}000$ volts.

The peak anode current $i_{a\,(pk)}' = \frac{2 \times W_{out} \times K_3'}{v_{a\,(pk)} \times K_4'}$ .....(6)

$$i_{a\,(pk)}' = \frac{2 \times 80 \times 3 \cdot 14}{880 \times 0 \cdot 785} = 720 \text{ mA.}$$

It should be noted that this is about the highest peak current that could have been demanded. If a higher value had been demanded, it would have been necessary to repeat the design using a lower value of D.C. anode current.

The anode voltage at which the peak current is drawn must be twice that used at the carrier if modulation is to be linear.

$$v_{a\,(min)}' = 2 \times 120 = 240 \text{ volts.}$$

The positive grid voltage required $= +125$ volts and the resulting peak grid current = 180 mA. Since the peak grid voltage does not vary over the modulation cycle, the grid bias must change from the carrier value so as to provide the positive grid voltage required at the crest.

$$V_g' = 187 - 125 = 62 \text{ volts.}$$

The ratio $\frac{V_g}{v_g\,(pk)} = \frac{62}{187} = 0 \cdot 33$ whence Fig. 20 shows a ratio of peak to D.C. grid current of $5 \cdot 0$. Hence $I_g' = \frac{180}{5 \cdot 0} = 36$ mA.

In some cases, it will be found that the grid current at the crest is less than that at the carrier. In such cases, the change in bias is easy to obtain, since a value of grid leak can be selected such that the required voltage change is produced by the calculated current change. In other cases, of which our example is typical, the grid current increases towards the crest so that a grid leak tends to shift the bias in the wrong direction. One solution to this problem is to apply a little modulation to the previous stage. This ensures that there is sufficient positive grid voltage to provide the crest anode current even though the bias is higher than the calculated value. It should be remembered that grid current calculations are subject to quite considerable errors due to the steep rise of grid current at low values of anode voltage. The calculations should be regarded as no more than indicating the type of experimental adjustments that are most likely to produce linear modulation.

The impedance offered to the modulator is given by $\frac{V_a}{I_a} = \frac{1{,}000}{0 \cdot 100} = 10{,}000$ ohms and the modulating power required is half the anode input to the R.F. amplifier $= 0 \cdot 5 \times 1{,}000 \times 0 \cdot 100 = 50$ watts.

Summarising the design:

(1) the anode supply will be 1,000 volts at 100 mA.
(2) the grid bias at the carrier will be — 110 volts.
(3) the previous stage should give an output of about 5 watts (a liberal allowance is desirable) and the inter-stage coupling should produce 185 volts peak at the amplifier grid. This will produce a D.C. grid current of about 13 mA.
(4) the power output will be 80 watts, less the loss in the tuned circuit.
(5) the modulator should deliver 50 watts into a load of 10,000 ohms.

Grid-modulated Class C Telephony

Since the conditions at the modulation crest are similar to those for Class C telegraphy, they will be calculated first. A typical angle of anode current flow is 180° so that $\theta = 90°$ and the design factors are $K_1 = 1 \cdot 0$; $K_2 = 0$; $K_3 = 3 \cdot 14$; $K_4 = 0 \cdot 785$.

The maximum anode voltage and dissipation are the same as for Class C telegraphy, but as the efficiency without modulation is essentially low, the permissible anode input is considerably reduced.

At the crest of modulation, the efficiency will be about 65 per cent. and from this the anode input can be assessed.

$$\text{Crest anode input} = \frac{40}{1 - 0 \cdot 65} = 114 \text{ watts.}$$

If $V_a = 1{,}200$ volts, the anode current $I_a' = \frac{114 \times 10^3}{1{,}200} = 95$ mA.

From equation (1) $i_{a\,(pk)}' = 3 \cdot 14 \times 95 = 300$ mA.

Let this current be drawn at $v_{a\,(min)}' = 150$ volts, requiring a positive grid excursion $v_{g\,(max)}' = +65$ volts and producing a peak grid current of 65 mA.

From equation (2) $v_{a\,(pk)}' = 1{,}200 - 150 = 1{,}050$ volts.

From equation (3) $W_{out}' = 0 \cdot 785 \times 0 \cdot 095 \times 1{,}050 = 78 \cdot 5$ watts.

From equation (4) $V_g' = \frac{-V_a}{\mu}$ (since K_2 = zero and $K_1 = 1$)

$$= \frac{-1{,}200}{30} = -40 \text{ volts}$$

$v_{g\,(pk)}' = 40 + 65 = 105$ volts whence the ratio $\frac{V_g}{v_{g\,(pk)}} = \frac{40}{105} = 0{\cdot}38$ which when referred to Fig. 20 shows that the ratio of peak to D.C. grid current $= 5{\cdot}3$. Hence $I_g' = \frac{65}{5{\cdot}3} = 12{\cdot}5$ mA.

The driving power at the modulation crest $= 0{\cdot}0125 \times 105 = 1{\cdot}3$ watts. The driving power varies during the modulation cycle and is greatest at the crest.

Now it is necessary to determine the carrier conditions. A typical value for $\theta = 60°$ whence $K_1 = 2{\cdot}0$; $K_2 = 1{\cdot}0$; $K_3 = 4{\cdot}6$; $K_4 = 0{\cdot}9$.

$$\text{The anode current } I_a = \frac{W_{out}'}{2 \times v_{a\,(pk)}' \times K_4} \quad \ldots\ldots\ldots\ldots\ldots\ldots\ldots (7)$$

$$= \frac{78{\cdot}5}{2 \times 1{,}050 \times 0{\cdot}9} = 41{\cdot}5\text{mA}.$$

From equation (1) $I_{a\,(pk)} = 4{\cdot}6 \times 41{\cdot}5 = 190$ mA.

For modulation to be linear, the value of peak anode voltage must be exactly half of the crest value $= \frac{1{,}050}{2} = 525$ volts.

Hence $v_{a\,(min)} = 1{,}200 - 525 = 675$ volts.

Locating 190 mA and 675 volts on the I_a/V_a curves, we find a grid voltage $v_{g\,(max)} = +18$ volts producing a peak grid current of 10 mA. The peak grid voltage remains unchanged during the modulation cycle so that the grid bias at the carrier $= 105 - 18 = 87$ volts.

The bias at the crest was -40 volts and the difference between these two values is the peak modulating voltage required.

$$= 87 - 40 = 47 \text{ volts peak.}$$

The power required from the modulator equals half the product of the peak modulating voltage and the crest grid current

$$= \frac{47 \times 0{\cdot}0125}{2} = 0{\cdot}3 \text{ watts.}$$

The impedance offered to the modulator $= \frac{47^2}{2 \times 0{\cdot}3} = 3{,}700$ ohms.

The power output will be one quarter of that at the crest

$$= \frac{78{\cdot}5}{4} = 19{\cdot}6, \text{ say 20 watts.}$$

The anode input $= 1{,}200 \times {\cdot}0415 = 50$ watts and the anode dissipation is $50 - 20 = 30$ watts. This is within our limit of 40 watts and it would now be possible to repeat the design using a higher anode input in an attempt to exploit fully the permissible anode dissipation.

The ratio $\frac{V_g}{v_{g\,(pk)}} = \frac{87}{105} = 0{\cdot}82$ and from Fig. 20 the ratio of peak to D.C. grid current is $9{\cdot}5$; hence $I_g = \frac{10}{9{\cdot}5} = 1$ mA (approx.)

From equation (5) $Z_a = \frac{525}{2 \times 0{\cdot}0415 \times 0{\cdot}9} = 7{,}000$ ohms.

Summarising the design:

(1) the anode supply will be 1,200 volts at 40 mA.
(2) the grid bias will be − 90 volts.
(3) the previous stage should give an output of about 2·5 watts and the inter-stage coupling should produce 110 volts peak at the amplifier grid. This will result in about 1 mA of grid current.
(4) the power output will be 20 watts less the circuit loss.
(5) the modulator should be designed to produce 50 volts peak into a load of 4,000 ohms. It should give a power output of about 0·5 watts.

FREQUENCY MULTIPLIERS

Frequency multipliers are designed in the same way as amplifiers for Class C telegraphy, but since the anode circuit is tuned to a multiple of the grid circuit frequency some of the formulæ are modified. Fig. 19 shows values of K_4 for harmonics up to the fifth; calculations of higher order harmonics are scarcely accurate enough to be worth while. The angle of anode current flow has to be chosen with some care; small angles which result in high efficiencies often require excessive values of peak anode currents and driving power. In order to estimate the permissible anode current, it is necessary to have some idea of the anode efficiency that will be obtained. The following table gives typical efficiencies and angles of flow.

Harmonic	2	3	4	5
Efficiency %	50	40	30	20
Angle θ	50°	40°	30°	25°

Let us consider the 40 watt triode used as a quadrupler. If the efficiency is taken as 30 per cent. the anode input $= \frac{40}{1 - 0{\cdot}3} = 57$ watts and if we assume $V_a = 1{,}000$ volts, then $I_a = \frac{57}{1{,}000} = 57$ mA. Taking $\theta = 30°$, $K_1 = 7{\cdot}7$; $K_2 = 6{\cdot}7$; $K_3 = 9{\cdot}2$; $K_4 = 0{\cdot}6$.

From equation (1) $i_{a\,(pk)} = 9{\cdot}2 \times 57 = 525$ mA.

The corresponding value of anode voltage is selected from the characteristic curves as 200 volts, requiring a positive grid voltage of + 94 volts and producing a peak grid current of 105 mA.

From equation (2) $v_{a\,(pk)} = 1{,}000 - 200 = 800$ volts.

From equation (3) $W_{out} = 0{\cdot}6 \times 0{\cdot}057 \times 800 = 27$ watts.

The equation for finding the grid bias is modified and becomes

$$V_g = -\frac{K_1}{\mu}\left(V_a - v_{a\,(pk)} \cos n\theta\right) - K_2 \times v_{g\,(max)} \quad \ldots\ldots\ldots\ldots (8)$$

where n is the number of the harmonic. Remember that if nθ is greater than 90°, the angle to be looked up in the cosine tables is (180° − nθ) and the result is negative. This is the case in our example where $n\theta = 4 \times 30° = 120°$ and $\cos 120° = -\cos(180° - 120°) = -\cos 60° = -0{\cdot}5$.

$$V_g = -\frac{7 \cdot 7}{30}\left(1{,}000 - 800\,(-0 \cdot 5)\right) - 6 \cdot 7 \times 94 = -990 \text{ volts.}$$

It is at once obvious that a grid voltage as high as the anode voltage is absurd and apart from requiring very great driving power would probably damage the valve. Therefore, the calculation must be repeated using a larger angle of flow. Let us try $\theta = 40°$ when $K_1 = 4 \cdot 4$; $K_2 = 3 \cdot 4$; $K_3 = 6 \cdot 9$; $K_4 = 0 \cdot 375$.

From equation (1) $i_{a\,(pk)} = 57 \times 6 \cdot 9 = 400$ mA

Let this occur at $v_{a\,(min)} = 125$ volts and $v_{g\,(max)} = +80$ volts

From equation (2) $v_{a\,(pk)} = 1{,}000 - 125 = 875$ volts

From equation (3) $W_{out} = 0 \cdot 375 \times 0 \cdot 057 \times 875 = 18 \cdot 5$ watts

From equation (8) $V_g = -\frac{4 \cdot 4}{30}\left(1{,}000 - 875\,(-\cdot 94)\right) - 3 \cdot 4 \times 80$

$= -540$ volts.

Even this might be considered an excessive value but let us accept it for the purpose of illustrating the design. The peak grid swing $v_{g\,(pk)} = 540 + 80 = 620$ volts. The ratio $\frac{V_g}{v_{g\,(pk)}} = \frac{540}{620} = 0 \cdot 87$ whence the ratio of peak to D.C. grid current is $11 \cdot 4$ (Fig. 20). The peak grid current is found from the characteristic curves to be 92 mA whence $I_g = \frac{92}{11 \cdot 4} = 8$ mA. The driving power $= 0 \cdot 008 \times 620 = 5$ watts.

From equation (5) $Z_a = \frac{875}{2 \times 0 \cdot 057 \times 0 \cdot 375} = 20{,}000$ ohms.

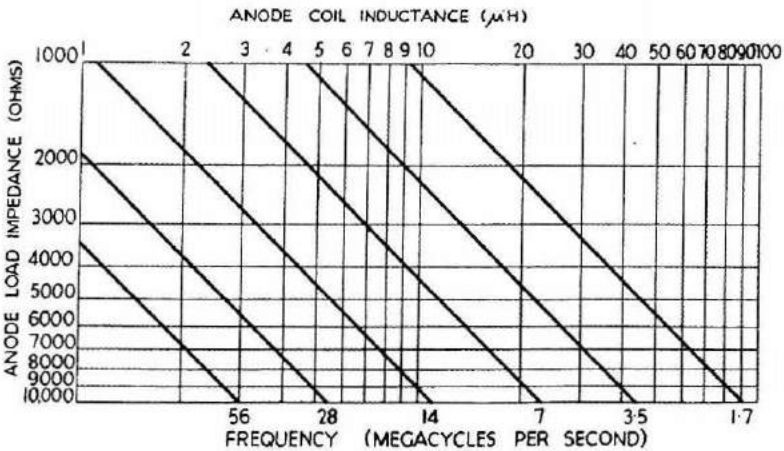

Fig. 21.
A chart from which can be read the values of anode tank coil inductance to suit the calculated anode load impedance for the various amateur bands.

Summarising the design:

(1) the anode supply will be 1,000 volts at 60 mA;
(2) the grid bias will be -540 volts;
(3) the previous stage should give an output of about 10 watts and the inter-stage coupling should produce 620 volts peak at the quadrupler grid. The grid current will be about 8 mA;
(4) the output will be 18 watts less the loss in the tuned circuit;
(5) the anode tuned circuit when loaded should present a load of 20,000 ohms.

Application of the Design Methods to Pentodes and Beam Tetrodes

All the design data given is for triode valves but the method is equally applicable to pentodes and beam tetrodes. Since the anode current depends largely on the screen voltage, the formulæ for calculating the grid bias are modified. Equations (4) and (8) become

$$V_g = -K_2 \times v_g\ (max) - K_1 \times \frac{V_{g2}}{\mu} \quad \ldots\ldots\ldots\ldots\ldots (9)$$

where v_{g_2} is the D.C. screen voltage, and μ is the triode amplification factor of the valve. If the curves of screen current are available, the D.C. screen current can be calculated by taking the peak screen current (at $v_a\ (min)$ and $v_g\ (max)$) and dividing by K_3 to get D.C. values.

CIRCUIT DESIGN FOR R.F. POWER AMPLIFIERS AND FREQUENCY MULTIPLIERS

The Anode Tuned Circuit

Each of the design methods shown yields a figure for the load impedance Z_a which should be presented to the valve to obtain the calculated performance. This figure is used to design the tuned circuit.

Let Q_L = the Q of the circuit when unloaded

and Q_o = the Q of the circuit when loaded

Since $Z_a = Q_o \omega L$ it follows that if we decide on a value for Q_o, the reactance of the tuned circuit is known and the required inductance value can be determined for any frequency. It is usually accepted that $Q_o = 10$ gives a reasonable compromise between tuned circuit loss and harmonic content of the output so that $\omega L = \frac{Z_a}{10}$.

The chart of Fig. 21 simplifies the calculation and shows the inductance required for load impedances up to 10,000 ohms for the various amateur bands. This is the inductance required when the anode is connected to one end of the circuit and the other end is earthy. If the centre of the coil is made earthy as in a push-pull amplifier or a neutralised single ended amplifier, the inductance value should be increased by four times in order that the valve shall "see" the same impedance. As an example, take our Class C telegraphy design which calls for an anode load impedance of 4,500 ohms. For the 3·5 Mc/s. band, Fig. 21, shows an inductance of 20μH. Since our valve is a triode, it will probably be used in a neutralised circuit in which the centre of the coil is earthy so that an inductance of 80 μH is required. An Abac shows

a corresponding value for the tuning condenser of 24 pF; it should be remembered that this includes the anode-earth capacitance of the valve together with the stray capacitance.

At the higher frequencies and in the case of frequency multipliers which require high values of load impedance, it will often be found that the inductance required is so large that it will not tune to the desired frequency even with the smallest possible value of tuning condenser. In these cases, the largest practicable coil is used and the value of Q_o is increased so as to present the correct load impedance. This increases the tuned circuit losses, but cannot be avoided. For instance, our frequency quadrupler required a load impedance of 20,000 ohms. If the output is at 28 Mc/s. the inductance required is 22μH (ten times the value for 2,000 ohms in Fig. 21). The corresponding value of capacitance is 1·5 pF whereas the minimum practical value is probably nearer to 10pF. This allows an inductance of 3·2μH which represents a reactance of 600 ohms at 28 Mc/s.

Now $Q_o = \frac{Z_a}{\omega_L} = \frac{20{,}000}{600} = 33.$

The efficiency of a tuned circuit is given by $\frac{Q_L - Q_o}{Q_L}$. Thus if a tuned circuit has an unloaded Q of 100 and the circuit is loaded so that $Q_o = 10$, the efficiency is $\frac{100 - 10}{100} = 0{\cdot}9$. This means that 90 per cent. of the power output from the valve will be passed on to the aerial so that our Class C telegraphy design would deliver $110 \times 0{\cdot}9 = 99$ watts to the aerial. The quadrupler would have a tuned circuit efficiency of only $\frac{100 - 33}{100} = 0{\cdot}66$ so that only $18{\cdot}5 \times 0{\cdot}66 = 12$ watts will be available for the next stage.

Of course, the amateur station is rarely equipped with means of measuring Q, but the examples give an idea of the losses to be expected. Abacs exist from which the Q can be calculated with fair accuracy.

Grid Bias

Grid bias for Class C amplifiers may be obtained from a fixed supply, a cathode resistor or a grid leak or from a combination of these methods. Grid leak bias alone should normally be avoided because the bias disappears if the drive fails; this usually results in a serious increase in anode dissipation of the valve. Some grid leak bias is usually desirable for anode-modulated amplifiers as it tends to improve the modulation characteristics by allowing the grid bias to vary over the modulation cycle. Grid leak bias must not be used for grid-modulated amplifiers since a variation in bias would involve serious distortion.

Decoupling Condensers

The condenser which connects the anode tuned circuit to earth (C in Fig. 15a) must be rated to carry the R.F. current flowing in this circuit. This is usually quite small in the case of triodes, but may be considerable when pentodes are used. In a pentode, the capacitance between anode and suppressor grid (screen grid in the case of a tetrode) is often quite large and constitutes the major part of the anode-earth capacitance. Since the suppressor and screen grids are at R.F. earth potential, the R.F. anode voltage is applied

directly across the capacitance between the anode and these electrodes. If this is 20 pF, at 28 Mc/s. it represents a reactance of only 280 ohms and if the R.F. anode volts are 1,000 volts, a current of $\frac{1,000}{280} = 4$ amps approx. will flow in the condenser C. The cheapest and often the best form of condenser for such a position consists of two discs of brass about 2" diameter clamped on either side of the metal baseplate with mica insulation. The inner faces of the discs should be flat and a clearance hole ½" diameter in the earthed plate is required to prevent flash-over. Such a condenser will convey at least 10 amps R.F. and will have a capacitance of about 700 pF if mica 0·2 mm. thick is used; this should be adequate insulation for 1,000 volts.

OSCILLATORS

It is not proposed here to discuss in detail the technique of oscillator design because modern radio equipment for communication purposes does not use a valve as an oscillator under optimum conditions for power output.

They are principally employed as a stable source of frequency for transmitters or frequency meters or as a B.F.O. or part of the frequency changer in receivers.

In the above cases a high level of output is often undesirable, but a low degree of harmonic generation is frequently essential and hence the circuit is so designed that the valve swings over a small part only of its characteristic and the output may be calculated as if it were an amplifier providing its own grid excitation.

In general it may be said that the treatment is the same as for a Class C amplifier and the ratings are similar except that a lower efficiency is obtained because the valve has to provide its own grid drive and this drive therefore must be deducted from the power output.

In order to obtain good wave-form and stable operation, and not necessarily the maximum output, it is desirable that the peak stored energy per cycle should be at least twice that fed to the load per cycle. Since this energy is stored in the tank circuit the Q of the circuit allowing for the equivalent resistance of the load should be at least 4π and the inductance and capacitance of the tank circuit are given by:—

$$L = \frac{V_a^2}{8\pi^2 \times W_{out} \times f} \text{ henrys, where } f \text{ is frequency in cycles}$$

$$C = \frac{2 \times W_{out}}{V_a^2 \times f} \text{ farads.}$$

CHAPTER 5 DETECTORS

THE attention of those readers who have ambitions towards quality reproduction is particularly drawn to this Chapter. Measurements show that the average detector is a much more fruitful source of distortion than the A.F. amplifier. Typical detectors of all types, as used in normal broadcast or communication receivers, give a harmonic distortion at 100 per cent. modulation of the order of 10 per cent.

It is the object of this Chapter to indicate the methods involved in the choice of operating conditions rather than to compare the merits of various types.

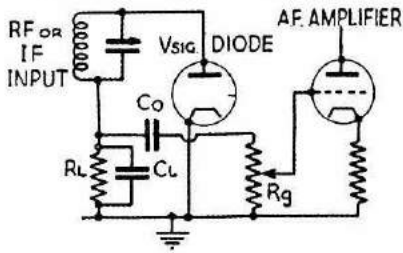

Fig. 22.
Circuit of a conventional diode detector.

Diode Detectors

The circuit of a conventional diode detector is shown in Fig. 22. The signal (V_{sig}) applied to the diode anode from an R.F. or I.F. source, the resistor (R_L) provides the diode load across which the demodulated signal is available; the rectified carrier current also produces a D.C. voltage. Across this load is shunted a condenser C_L to provide an easy path for R.F. but not A.F. currents. The coupling condenser C_o prevents the D.C. voltage appearing across the A.F. volume control R_g and thus biasing the grid of the A.F. amplifier valve. The time constant of C_L and R_L must be long in relation to the carrier frequency but short compared with the modulation frequency.

In order to obtain a high degree of efficiency it is desirable to make R_L high compared with the internal impedance of the diode (r_a), which in the case of a normal receiving diode varies from about 200 ohms for low impedance television types to about 10,000 ohms for those associated with a triode in a double diode triode.

It will be noticed that as in a voltage amplifier the grid leak of the succeeding valve is in parallel with the diode load from an A.C. point of view but in this case it does more than just lower the effective amplification. It will in fact cause the A.F. output to be distorted above certain depths of modulation because the A.C. load is lower than the D.C. load.

Fig. 23 shows the anode current plotted against anode voltage (I_a/V_a) for a typical high impedance detector diode for various R.M.S. input voltages. D.C. load lines have been drawn for different values of diode load (R_L), and it will be observed that with zero input volts and zero anode volts there

is a small standing current. This is due to contact potential within the valve and represents an artificial D.C. bias of about 1 volt. If, for example, a load of 500,000 ohms is used and a carrier of 15 volts R.M.S. is applied the operating point will be at A with the result that an anode current of 39 microamps will flow and a D.C. bias of 19·5 volts will be set up in the load. If now the carrier is modulated at 100 per cent. the carrier will swing about point A from 30 volts (point B) to zero volts (point C). Hence an A.F. voltage will appear as well as the D.C. voltage, the amplitude of the A.F. voltage being proportional to the lengths AB for the positive peak and AC for the negative. The ratio of these lengths is an indication of the distortion; in this case the positive peak is 19·5 volts and the negative 18·5 volts. The R.M.S. A.F. output at 100 per cent. modulation is 13·5 volts.

It can be shown that the maximum percentage modulation that can be accepted without distortion is equal to:

$$100 \times \frac{\text{negative peak}}{\text{positive peak}} = 100 \times \frac{18 \cdot 5}{19 \cdot 5} \text{ or } = 95 \text{ per cent.}$$

In the above case, only the D.C. diode load has been considered, but in practice the A.C. load includes the succeeding valve grid leak or volume control (R_g). If this is taken as 1 megohm the effective A.C. load is 330,000 ohms assuming the reactance of C_o is negligibly low. The D.C. load settles the operating point so the point A remains unchanged, but the A.C. load line will have a slope equivalent to 330,000 ohms instead of 500,000, and is shown as the line EAF. With 100 per cent. modulation the carrier

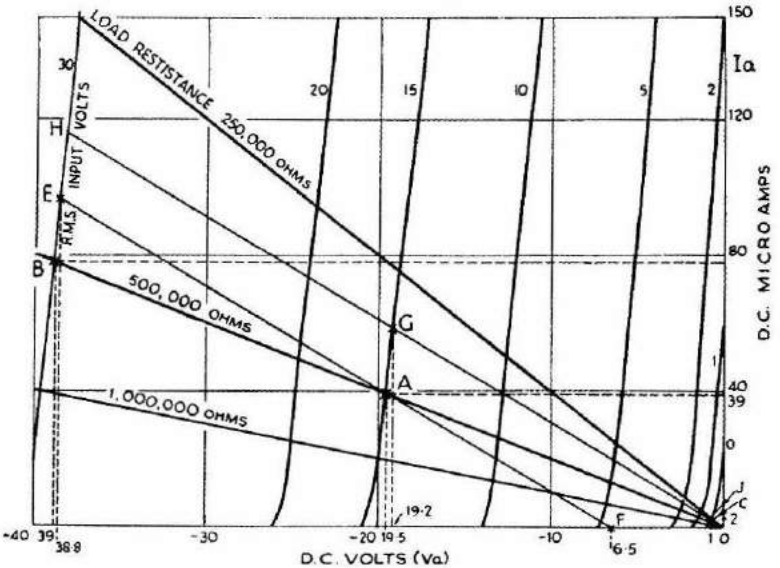

Fig. 23.
Dynamic curves of a typical high impedance detector diode showing various D.C. and A.C. load lines and the effects of a positive bias on the diode for reducing the distortion.

will swing about the point A to 30 volts (point E) and to zero volts (point "F"). It is at once evident that the load line at the point "F" cannot reach the zero input curve; in fact it would only reach an input of about 4 volts. Hence the negative peak of the modulation is trying to take the diode beyond cut-off. The maximum modulation depth which can be accepted without distortion under these conditions, allowing for the A.C. load $= 100 \times \frac{19 \cdot 5 - 6 \cdot 5}{38 \cdot 8 - 19 \cdot 5} = 67 \cdot 5\%$ and the mean A.F. output at 100 per cent. modulation will be 11·5 volts.

From the above example it is clear that the ratio of the D.C. load to the A. C. load is of considerable importance, and it is essential that the grid leak or volume control have as high a value as is practicable. Unfortunately the maximum resistance that may be used in the grid circuit of a valve is limited by the danger of grid current. Further, if the resistance is a volume control, the input capacity of the valve will cause a variation of the A.F. frequency response with varying volume settings. An alternative would seem to be to reduce the value of the D.C. load keeping the A.C. load as high as practicable. But this results in further difficulties because the lower the D.C. load the more non-linear the D.C. load line becomes—unless a diode is chosen having a lower impedance. Also, as the input impedance of a diode detector is approximately equal to half the value of a D.C. load resistor, a lowering of the D.C. load would heavily load the R.F. or I.F. input, so that it might not then be possible to provide sufficient input from a normal R.F. pentode as an R.F. or I.F. amplifier. If the input is reduced, the contact potential at point C mentioned earlier becomes more important, because the operating point A will move to the right, and since C is fixed the difference in the lengths of the lines BA — AC, will increase at an increasing rate as the signal input is reduced. Actually the greater the input the less the distortion.

There is another matter not yet covered that arises in a practical diode detector circuit. This is that the R.F. or I.F. carrier should not be allowed to reach the A.F. amplifier and a filter circuit must be inserted between the diode load and the grid resistor. This filter usually comprises a series resistance and a parallel condenser combination, but a choke may be used in place of the resistance. If the resistance is too low in value or the choke of too low inductance the filtering will be poor and the following condenser will in effect be in parallel with C_L (see Fig. 22) thus lowering the A.C. load at the higher audio frequencies. On the other hand if the opposite is true the A.C. load will be higher, but the higher audio as well as the radio and intermediate frequencies will be attenuated by the filter. Most of the distortion due to a poor ratio of D.C. to A.C. load may be reduced by the application of a suitable value of positive bias to the diode. The application of +0·3 volts to the diode in the example in Fig. 23 would move the operating point from A to G and the 330,000 ohms A.C. load line would now be HGJ and the maximum modulation acceptable would be again 95 per cent. This small positive bias is critical in value and is only correct for one particular carrier input voltage. The method may be applied to experimental receivers equipped with some method of monitoring the applied input but if applied to receivers incorporating A.V.C. or within a fading area of a broadcast station some automatic method of adjusting the value is essential.

Leaky Grid Detectors

The operation of this type of detector is somewhat complex but is analogous to that of a diode with a direct coupled amplifier. Fig. 24 shows a typical

triode circuit. In such a circuit the grid and cathode may be considered as a diode, the grid being the diode anode, but acting at the same time as the control grid of the triode. R_L, the grid leak, is the diode load and C_L the reservoir condenser. As in the case of the diode detector an input carrier will set up a D.C. voltage across, R_L, which will provide bias for the grid. Both the carrier and the A.F. modulation will be amplified in the triode hence a filter circuit will be required in the anode circuit to prevent the carrier reaching the remainder of the A.F. amplifier.

Considering the grid-cathode as a diode, more severe limitations apply than in a normal diode detector because there is still a contact potential existing between the grid and cathode, but it is not possible to apply nearly as much input as the earlier example because the D.C. voltage developed will bias the grid as an amplifier beyond cut off, with a result that there will be little if any output. It is evident that the ideal input is such that the D.C. voltage developed by the carrier will just bias the grid to the straight portion of its characteristic.

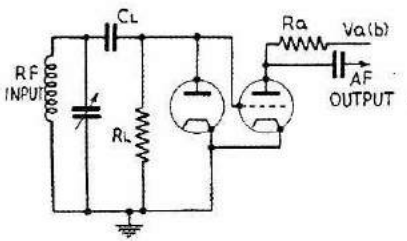

Fig. 24.
A circuit showing the functional operation of a triode as a leaky grid detector.

If curves of the grid voltage—grid current characteristics of the triode are taken (like those of the diode in Fig. 23) and operating conditions are chosen to fit the triode curves as a voltage amplifier (such as those in Fig. 2) it is possible to design the detector.

A difficulty arises, however, because the contact potential of the grid is affected to some extent by the anode current and anode voltage, both of which are varying with the A.F. modulation due to the presence of the anode load R_a. This contact potential variation will have some effect on the shape of the diode curves, and since the input must be fairly small the distortion due to this contact potential will be considerable in the same way as in the earlier example. Fortunately the ratio of D.C. to A.C. load does not enter into the picture, but the time constant of R_L and C_L and the effect of the carrier frequency filter in the anode circuit must still be considered. Too little filtering to the carrier frequency will reduce the efficiency of the amplifier and too much will again attenuate the higher audio frequencies.

The efficiency will be low without an anode by-pass condenser because if the carrier appears across the anode load resistor the " Miller " effect will load the grid with a considerable capacity, which becomes shunted across the grid leak R_L and is in series with C_L. When the anode is by-passed to earth for R.F., the input capacity does not contain a term which is multiplied by the voltage gain.

Because of the small input that could be accepted by conventional detectors of this type, the " power grid " detector was introduced. This is really the same but it employs a triode having a lower amplification factor and a

greater H.T. voltage and in consequence because of its longer grid base it can accept a larger input whilst still operating as a direct coupled amplifier on the linear part of its characteristic. Hence there is less distortion in the "diode" part, but generally less sensitivity because of the lower "amplifier" gain.

Where tetrodes or pentodes are employed, the operation is similar and approximate calculations may be made from a study of the grid to cathode characteristics in the case of a diode and the dynamic I_a/V_a curves in the case of a voltage amplifier.

As is well-known the operation of such detectors is affected considerably by the application of bias to the grid leak, which may be obtained by returning the grid leak to the positive filament lead when battery valves are used. This procedure is analogous to the example of a diode with a positive bias shifting the operating point and the load line to a more advantageous position.

Anode Bend Detectors

This type of detector depends for its action on the curvature in the anode current/grid voltage (I_a/V_g) characteristics. If a valve is biased nearly to cut-off and an input is applied to the grid, the negative half cycle will drive the grid more negative and only a small change in anode current will occur, whereas the positive half cycle will drive the grid positive and cause a considerable increase in anode current.

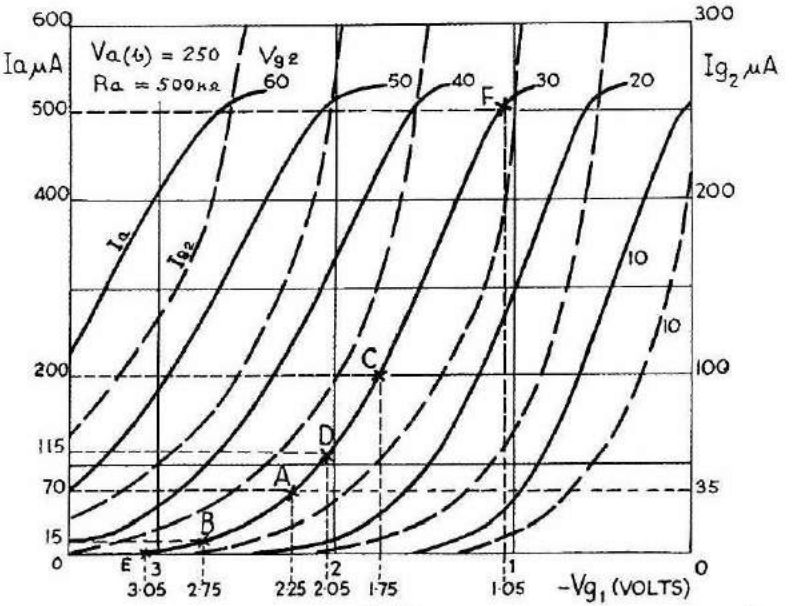

Fig. 25.
Dynamic curves of an R.F. Pentode showing the operating conditions when used as an Anode bend detector.

For an anode bend detector, a valve having a short grid base and as sharp a bottom bend as possible should be chosen. The valve may be coupled to the following stage by any method applicable to voltage amplifiers.

As an example Fig. 25 shows the dynamic I_a/V_g curves of the R.F. Pentode used in the voltage amplifier shown in Fig. 5, but in this case the operating point should be near cut-off. The valve is assumed to be R.C. coupled as before with a 500,000 ohms anode load. A curve should be chosen so that the grid is always more than one volt negative to the cathode, otherwise grid current will flow and cause damping to the R.F. input circuit. Such a curve is that for screen volts 30. A possible operating point is -2·25 volts at A. If an unmodulated carrier of 0·5 volts peak is applied to the grid the operating point will swing from -2.75 volts at B to -1.75 volts at C. Swinging from A to B will decrease the anode current from 70 to 15 microamps (55 microamps) whereas swinging from A to C will increase the current from 70 to 200 microamps (130 microamps). Since the anode current increase is greater than the decrease, rectification will occur and also the mean anode current will increase. The increase will be proportional to the ratio of the areas under the curves for the portion A B and A C. The ratio in this case is 1·65: so that the anode current will increase to 115 microamps and the operating point will effectively shift to D.

If now a 100 per cent. modulated carrier is applied the swing will be 1 volt peak, in other words from -3·05 to -1·05 volts E to F. The mean anode current will further increase in proportion to the areas under this curve and the detector efficiency will also be proportionate to these areas. If automatic bias is employed the resistor in the cathode should be chosen to fit the curves at point A where the anode current is 70 μA. The screen current is 35 μA. so the cathode current is 105 μA., and since the required voltage is -2·25 volts, the resistor will be $\frac{2\cdot25}{105} \times 10^6 = 21{,}000$ ohms.

It is quite evident from the appearance of the curve that over D E and D F some considerable distortion will result since the negative half cycle of the modulation will not be completely suppressed, because neither the portion of curve B E nor the portion D F is linear.

A valve having a much sharper cut off is really required but in general such valves do not exist. Measurements show that distortion, of the order of 10 per cent. on 100 per cent. modulation will occur in an anode-bend detector valve under the conditions quoted.

The peak output voltage (for an input of 0·5 volts swing at 100 per cent. modulation) will be somewhat less than half the length D F represented by a change of 115 to 500 μA. in 500,000 ohms $= \frac{1}{2} \times \frac{385}{10^6} \times 500{,}000 = 96$ volts peak or 68 volts R.M.S. This figure is optimistic because due allowance has not been made for the fact that the negative halfwave is not entirely suppressed and this should be deducted from the positive halfwave to obtain the true output. Also, in the same way as for voltage amplifiers, due allowance should be made for the succeeding A.F. valve grid resistor.

Infinite Impedance Detectors

If the fundamental anode bend detector is re-arranged in such a manner that the output load is in the cathode of the valve instead of the anode a variety of " cathode follower " results. Because the input impedance is very

high due to the 100 per cent. negative feed-back, it is referred to as an infinite impedance detector. Fig. 26 shows the essential circuit. The modulated carrier is applied to the grid and the load in the cathode is R_k. This load is by-passed by a condenser C_k, which should have a reactance low to carrier frequency but high to modulation frequency. The anode is also by-passed with a condenser C_a large enough to be a low reactance to both frequencies. The rectified output is available across the resistor R_k and is supplied to the A.F. amplifier via a filter circuit comprising C_o, R_o and C_g and R_g. Such a filter is generally necessary because there is often quite an appreciable carrier voltage remaining across R_k despite the effect of C_k. The resistor R_o may be replaced with advantage by a H.F. choke, if difficulty is experienced with drop in response at the higher audio frequencies.

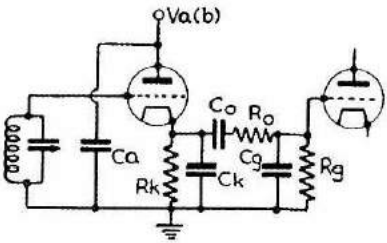

Fig. 26.
The essential circuit of an infinite impedance detector.

The resistor R_k should have a high value compared with the reciprocal of the mutual conductance of the valve. Since for most values $1/g_m$ is of the order of 100 to 1,000 ohms suitable values for R_k are from 10,000–100,000 ohms. The gain of such a detector, like all "Cathode follower" circuits, is less than unity. Neglecting inter-electrode capacities the gain $= \frac{R_k}{1000/g_m + R_k}$ and the input impedance $= c_{ga} + \frac{c_{in}}{\mu}$ where μ is the valve amplification factor at the operating point. Fig. 27 shows the anode current/anode voltage (I_a/V_a) curves for the triode used as a voltage amplifier example in Fig. 2 having a rated amplification factor (μ) of 20, slope of 2·4 mA./V. at $V_a = 250$ and $V_g = -8$. The value of $1/g_m$ is approximately 400 ohms so that a cathode load of 25,000 ohms would be quite sufficient.

Using an H.T. line voltage ($V_{a\ (b)}$) of 250 volts the load line will be A B. The fact that the load is in the cathode instead of the anode makes no difference to the load line, but the voltage drop across the cathode resistor is applied as grid bias hence the operating point will have to be such that the anode current multiplied by R_k is equal to the grid voltage and this voltage must lie on the line AB and yet fit the characteristic curves. Such a condition is grid volts −13 where the anode current is 0·52 mA, the drop in R_k being 13 volts and that in the valve (250–13) or 237 volts. The point C is obviously close to the cut-off of the valve and any appreciable input to the grid would result in cut-off being reached on one half cycle in the same way as for an anode bend detector. If, for example, an input of carrier of 3 volts peak is

applied the grid would appear to swing from —10 volts to —16 volts, but in fact it will not do so, because the increase in anode current will change the grid voltage, as the input is not being applied between grid and cathode. For example at –10 volts, the anode current would be 1·6 mA, the drop in R_k 40 volts, and the drop in the valve 210 volts. Clearly, all three cannot happen at one time. The trouble is that a different sort of curve is required, a dynamic one obtained by plotting applied voltage against anode current rather than actual grid voltage against anode current. Such a curve can easily be obtained for any given value of R_k by replotting Fig. 27. For example a grid voltage of zero (point D) gives an anode current of 7·1 mA or an input voltage of +177·5 volts. A grid voltage of –10 (point E) gives 1·6 mA or an input of (40 –10) or 30 volts. A grid voltage of –13 (point C) gives 0·52 mA or input zero and a grid voltage of –16 (point B) gives zero anode current and hence corresponds to an input of –16 volts. A portion of such a replotted curve is shown in Fig. 28a with the equivalent points B C and E marked. Other curves have been drawn for values of R_k of 10,000 and 50,000 ohms. It is clear that the curve is almost perfectly straight indicating low distortion.

Between points C and E, the anode current increases from 0·52 mA to 1·6 mA for a change of 30 volts in input voltage. Hence the change in

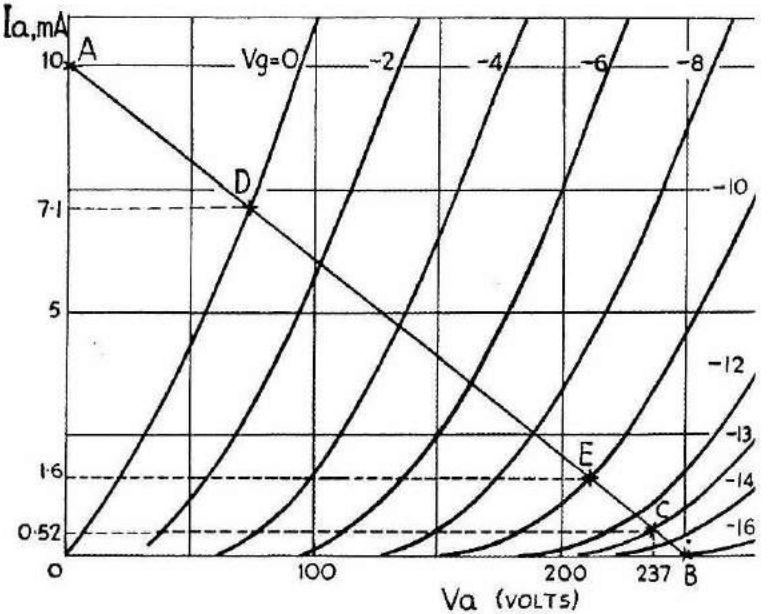

Fig. 27.
The load line as an infinite impedance detector drawn on the characteristic curves of a typical triode.

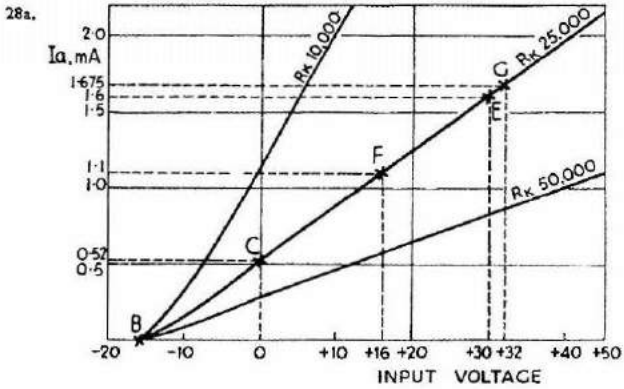

cathode voltage (or output) is $\frac{1 \cdot 08 \times 25{,}000}{1{,}000}$ or 27 volts. The voltage gain is, therefore, $\frac{27}{30}$ or 0·9. If a carrier of 16 volts peak amplitude is applied the anode current will swing from B to a point F at I_a 1·1 mA and twice the carrier, 32 volts, to point G.

A family of dynamic curves can be taken if various A.C. inputs are applied to the detector and the anode current is plotted against D.C. voltage drop across the cathode resistor (R_k). Such a family of curves is shown in Fig. 28b.

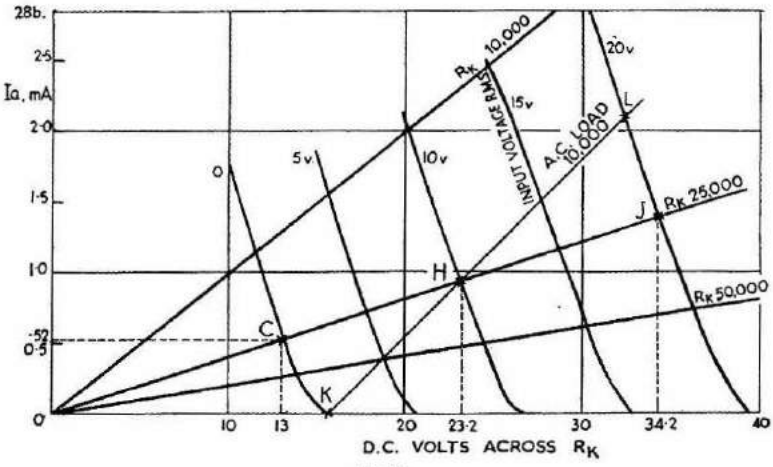

Fig. 28.
(a) A dynamic curve for an Infinite impedance detector re-plotted from Fig. 27. (b) A family of dynamic curves for an infinite impedance detector.

The curve for zero input is the standing anode current with no signal applied. D.C. load lines have been drawn on the curve for loads of 10,000, 25,000 and 50,000 ohms. It will be noted that the anode current with zero volts input on the 25,000 ohm line is 0·52 mA which is point C. These curves may be examined using any suitable sine wave input, such as 50 cycle mains, providing the anode supply is adequately decoupled to 50 cycles and the time constant of C_k R_k is suitable. If R_k is 25,000 ohms, C_k may be $2\mu F$ at 50 cycles.

It is seen that an increase in A.C. input increases the anode current, indicating anode bend rectification. If a carrier of 10 volts R.M.S. is applied, the anode current increases to point H, which is the operating point for this carrier voltage. When this carrier is modulated 100 per cent. the operating point will swing over the portion of the curve from J to C, the distortion being indicated by the difference in the lengths CH and HJ. These lengths represent changes of 10·2 and 11 volts across R_k or a mean of 10·6 volts. This figure is the peak A.F. output with 10 volts R.M.S. input 100 per cent. modulated, so the R.M.S. A.F. output will be 10·6 × 0·707 or 7·5 volts.

So far it has been assumed that the value of R_k represents both the A.C. and the D.C. load for the detector, but this may not be so. For example, in Fig. 26 if the impedance of the filter and grid leak combination C_o, R_o, C_g and R_g was 17,000 ohms to A.F. then the A.C. load line would be 17,000 in parallel with R_k or 10,000. Such a line KHL has been drawn about the point H and this line represents the lowest A.C. load possible without travelling beyond anode current cut-off with a 100 per cent. negative modulation peak so that this detector can accept a ratio of A.C./D.C. load of $\frac{(10,000)}{(25,000)}$ or 0·4 for 100 per cent modulation.

In practice it is unlikely that A.C./D.C. ratio would be low as this figure so that this detector is not normally subject to such difficult requirements as regards the ratio as is the diode. It should be noted, however, that the distortion is increased with a low A.C. load since the ratio of the lengths HL/KH is greater than that of HJ/CH.

In practice a detector using a value of R_k of 25,000 and A.C. load of 250,000 ohms with an input of the order of 10 volts R.M.S. will produce a total harmonic distortion not exceeding 3 per cent. at 100 per cent. modulation. Inputs less than about 5 volts are not advised as the curves converge closer and closer together giving increased distortion.

The value of C_k must not be made too small or the valve will appear as a negative resistance input to the tuned circuit, causing actual instability, or at least such an increase in "Q" of the coil that the side bands will be cut, due to the increased selectivity. A suitable value for C_k (with R_k = 25,000 ohms) is from 250 to 500 p.F. at 1 Mc/s.

CHAPTER 6 FREQUENCY CHANGERS

IN order that a valve may act as a frequency changer it is essential that it shall operate over a non-linear part of its characteristic. This infers that the process is akin to signal detection and any type of valve that will operate as a detector will operate as a frequency changer. From this it does not follow that they will be efficient. The essentials are that an input signal is applied together with a heterodyne voltage of such amplitude that the valve swings over a non-linear part of the characteristic with a result that the sum and difference frequencies appear in the output circuit. The overall voltage gain of a frequency changer or the ratio of I.F. voltage output to R.F. signal voltage input is known as the "conversion gain" and the ratio of the beat frequency component in the output current $(f_1 - f_2)$ or $(f_1 + f_2)$ to the input voltage f_1 is known as the "conversion conductance" (g_c) and is usually stated in microamperes/volt.

The conversion conductance is measured by applying an A.C. voltage to the control electrode and reading the change in D.C. anode current. Thus it is evident that if the valve is operating over a straight portion of the characteristic the change will be zero and no beat frequency product will result.

In order to obtain a more accurate figure for g_c it is usual in the case of multi-grid valves to make a known change in the voltage of the control electrode in either direction whilst injecting a suitable value of voltage on the oscillator electrode to give the working value of heterodyne voltage. The D.C. anode current will then change both up and down compared with the mean value and the value of g_c is half the total change in anode current.

In general it is desirable that the input signal voltage shall be small compared with the heterodyne voltage, which is usually the case because the frequency changer valve is essentially one of the early stages in the receiver circuit.

Figures for conversion conductance may be obtained by using 50 cycle mains for the signal and heterodyne voltage. Care must be taken that all voltage supplies are decoupled with large condensers of low reactance at 50 cycles, and other condensers in grid or cathode circuits are increased in value proportionately to the frequency. For example 100 pF used at 1 Mc/s. would be equivalent to 2 μF at 50 cycles. A suitable signal input is 1 volt and the small changes in anode current may be read on a low range meter, biased back, such as used in many valve voltmeter circuits.

The voltage gain of a frequency changer is approximately the conversion conductance multiplied by the dynamic resistance of the I.F. transformer primary. Due allowance must be made in calculating the "Q" and the selectivity of the I.F. transformer for the anode-cathode impedance of the valve in shunt with the primary. If it is not possible to measure the conversion conductance the gain of the stage may be calculated as if it were an I.F. amplifier operating at the same point, and as a rough guide the gain as a frequency changer will be from 0·4 to 0·6 times the I.F. gain.

The types of frequency changer circuit are legion but descriptions of the basic types follow.

Diode Frequency Changers

A diode may be used as a frequency changer, a typical circuit being shown in Fig. 29. The R.F. input is applied to the anode, the heterodyne voltage to

the cathode and the I.F. output is taken from the cathode. The resistor R_k and condenser C_k provide the diode load. The diode load is used to fix the operating point, and to prevent the diode from acting as a short circuit to the signal, the oscillator and the I.F. amplifier. The impedance presented to all three is approximately equal to half the value of R_k. The value of the reactance of C_k should be low compared with the frequency of either.

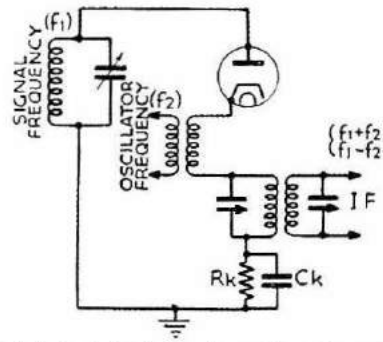

Fig. 29. Typical circuit of a diode valve used as a frequency changer.

In order to determine the operating conditions reference should be made to the method described for diode detectors.

A load line is drawn as in Fig. 23, and the heterodyne voltage should be reasonably large compared with that due to contact potential. Usually about 3 volts or upwards is adequate unless the heterodyne frequency is a harmonic of the local oscillator in which case it can be larger. The slope of the load line in terms of anode current (in microamps) per volt of input signal is the conversion conductance g_c. For example, for the 500,000 ohm line in Fig. 23, an input of 15 volts produces 39 microamps. Therefore the slope is 2·6 microamps/volt in the D.C. load. The A.C. load is the impedance of the primary of the I.F. transformer shown in Fig. 29 and will be drawn at the operating point in same way as EAF in Fig. 23, assuming the impedances of the signal input circuit and the oscillator injection circuit are low at I.F. This type of frequency changer is generally employed at U.H.F., where difficulties arise with more complicated types. It has the advantage of very low noise and an almost complete indifference to the value of heterodyne voltage, providing this voltage is above the minimum figure. It will also operate satisfactorily on harmonics of the local oscillator. For U.H.F. operation a low impedance low capacity diode of the television type is generally used and the values of R_k should be about 100,000 ohms and C_k 0·01 μF.

Triode Frequency Changers

These are usually of the anode bend type, the signal being applied to the grid, the oscillator injected in series with the cathode, and the I.F. transformer being connected in the anode. The anode should be by-passed to ground with a condenser of low reactance at signal, and oscillator frequencies. The capacities used for this purpose will comprise part of the I.F. tuning.

Fig. 30 shows a typical circuit, the resistor R_k and condenser C_k are now the autobias circuit, the reactance of C_k being low to all three frequencies.

A value of heterodyne voltage should be used such that the grid swings from beyond cut off to nearly the point of start of grid current such as from E to F in Fig. 25, the slope between C and F being 300 microamps for 0·3 volts or a g_c of 1,000 μa/V. This curve of Fig. 25 is only taken as an example and it should be noted that this was plotted with a resistor of 500,000 ohms in the anode whereas in practice a load line must be drawn on the normal I_a/V_a curves corresponding to the impedance of the I.F. transformer primary as the load in order to determine the I.F. output voltage and conversion conductance.

Triodes are used in the above manner for short wave receivers where a very good signal to noise ratio is essential and where there is considerable difference in frequency between the signal frequency and the I.F. Care should be taken to match the anode impedance to the I.F. transformer.

The value of g_c will generally be approximately one quarter of the value of the g_m used as an amplifier.

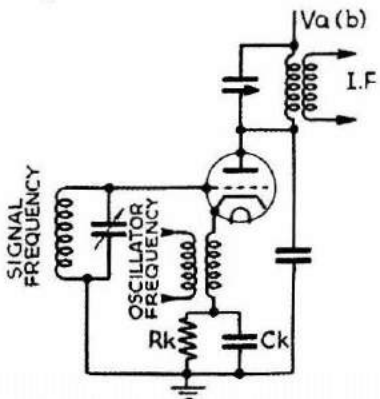

Fig. 30. A triode valve used as a frequency changer.

Pentode Frequency Changers

A pentode valve may be employed as a frequency changer in a number of different ways. In general the signal is always applied to the control grid g_1 and the I.F. output is taken from the anode circuit, but the heterodyne voltage may be injected in the control grid or cathode circuit, when the valve functions in the same way as an anode bend detector. The same considerations apply as for the triode frequency changer, except that due to the much smaller control grid-anode capacity, interaction between the signal and I.F. circuits if they are more nearly alike in frequency, is less troublesome. In addition the heterodyne voltage may be injected at the screen g_2 or the suppressor grid g_3.

In the former case Fig. 31 shows the curves of a typical pentode plotting anode current and screen current against screen voltage for a constant g_1

voltage, and mutual conductance against screen voltage ; from these it is evident that if the screen voltage is varied the anode current and mutual conductance will vary also. Thus if the screen voltage is fixed at 60 volts as at point A, and a heterodyne peak voltage of 20 volts is applied, the screen voltage will vary from 40 to 80 volts and the anode current from 0 to 0·98 mA at C. Since the increase in anode current will be greater than the decrease, the valve will act as a frequency changer. The mean anode current will as a result increase proportionately to the areas under the curve to a point about B, 0·67 mA.

As at this point the slope is also 0·67 mA/V the conversion conductance will be about half this figure. The actual value may be measured by applying a 1 volt change to the grid in either direction and noting the change in anode current whilst the screen is maintained at 60 volts D.C. with a 20 volts A.C. applied in series with it. The disadvantage of this method is the large heterodyne voltage required for good conversion.

Fig. 32 shows the curves of an R.F. pentode plotting the anode current against suppressor grid voltage (I_a/V_{g3}) with constant screen and control

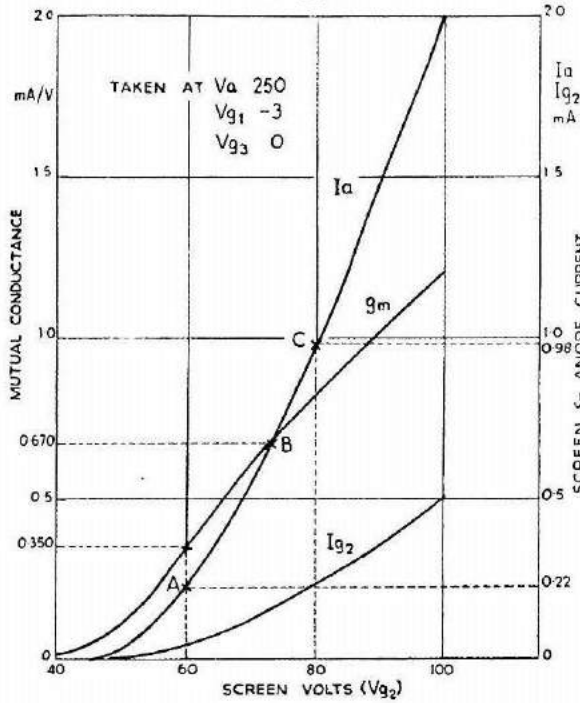

Fig. 31.
Characteristic curves of a typical R.F. pentode plotting anode current against screen voltage and showing their use for determining the performance of a pentode frequency changer with screen grid injection.

grid voltage. There are two major bends in the characteristic and either may be used. The suppressor may be biased to a point such as A and a heterodyne voltage of the order of 25 volts applied swinging the anode current from B to C, or a large bias may be used (point D) when the current will swing from E to F. If the latter point is used care must be taken that screen current is not so excessive as to cause the safe screen dissipation to be exceeded. The determination of the corresponding drop or rise in anode current is performed in the normal manner and the conversion conductance may be determined in the way previously described. This form of injection, like screen injection, requires a large heterodyne voltage and if an appreciable amount of this voltage is allowed to be picked up by the control grid circuit either by valve capacities or layout, etc., this voltage on the control grid will be amplified by the gain of the valve considered as a triode (the screen acting as anode) and may be comparable with that being intentionally applied to the suppressor. Since it will be of opposite phase demodulation will take place and the conversion will be poor. This effect is particularly troublesome at high frequencies.

Multi-grid Frequency Changers

These types of valve are specifically designed to act as frequency changers. They are designed to have a reasonably high conversion conductance, with as low a value of heterodyne voltage as is practicable and a high anode

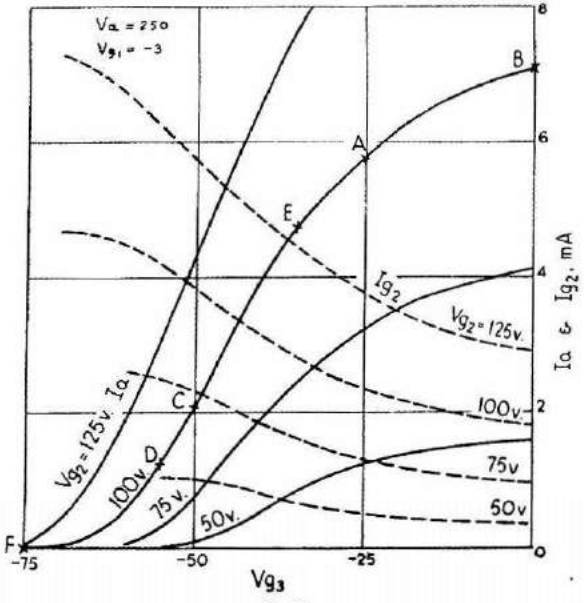

Fig. 32.
Characteristic curves of an R.F. pentode plotting anode current against suppressor grid voltage and showing their use for determining the performance of a pentode frequency changer with suppressor grid injection.

impedance so as not to damp the I.F. transformer unduly. The signal frequency may be taken close to the I.F. without difficulty and A.V.C. may be employed satisfactorily. The only disadvantages are their limited performance at high frequencies and the fact that the signal to noise ratio is poor. For a further discussion on the latter point the reader is referred to a later section of this book.

Some types are designed for use with a separate oscillator to provide the heterodyne voltage whilst others have a self-contained triode to provide such voltage. Certain types of heptode are arranged to oscillate as an electron coupled oscillator with part of the oscillator coil in the cathode circuit. The essential point is that the oscillator must be arranged to provide the necessary heterodyne voltage and as far as practicable this voltage should remain constant over any given frequency band.

There are two types of essential characteristics published by the valve manufacturers, and the first is shown in Fig. 33 for a typical triode hexode valve. This plots conversion conductance, anode impedance, and cathode current against heterodyne voltage at the operating control grid bias. The "X-axis" may be shown in various ways. The scale may be as shown, which

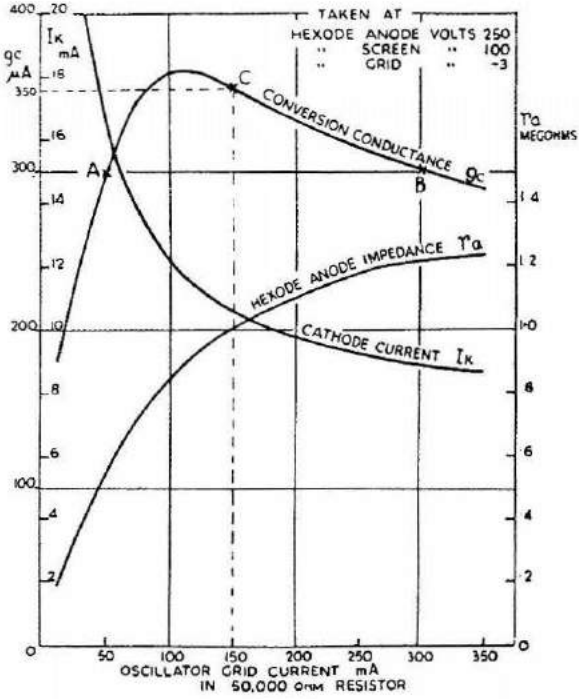

Fig. 33.
Typical published characteristics of a triode-hexode frequency changer showing effects of varying the heterodyne voltage.

is the D.C. grid current in the recommended value of grid leak, which is a simple measure of the heterodyne voltage, or it may be directly as values of heterodyne peak voltage or as heterodyne R.M.S. voltage, but in any case such curves show the relation between the g_c, r_a or I_k and heterodyne voltage.

It will be noticed that for small values of oscillator grid voltage the value of g_c is falling very rapidly, as is the value of r_a, so that the gain in a receiver will fall off rapidly with low values of heterodyne voltage. It is therefore desirable that the coupling of the oscillator coils is so adjusted that the voltage never falls below a value corresponding to point A on the curve. Too much voltage causes a less rapid fall in g_c and this fall is to some extent offset by a rise in r_a giving a rising I.F. gain due to reduced loading on the I.F. transformer. Nevertheless it is undesirable for the voltage to exceed a point around B because excessive voltage will tend to generate harmonics making a receiver prone to spurious whistles. If the valve is operating at point C with a grid current of 150 μA the D.C. grid voltage will be 7·5 volts,

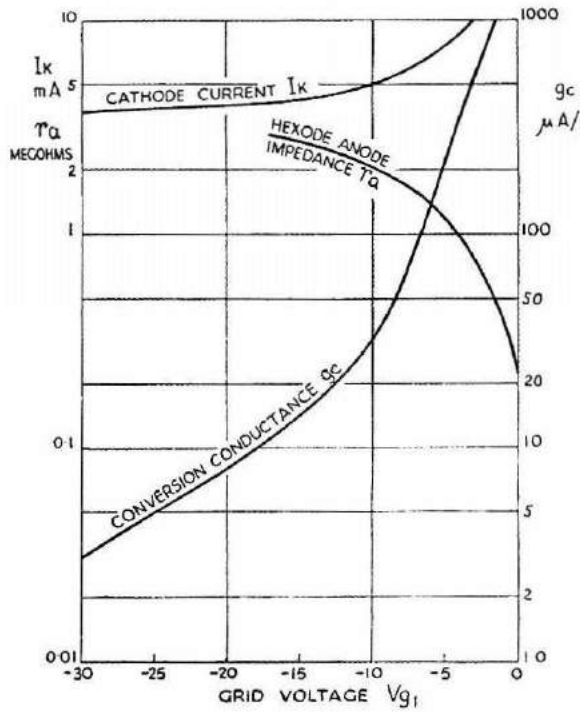

Fig. 34.
Characteristics of a triode hexode frequency changer showing the effects of varying the control grid voltage.

the heterodyne peak voltage will be 1·2 times the D.C. value or 9 volts, and the anode impedance will be 1 megohm. This value is relevant to the design of the I.F. transformer and will determine its step-up. The cathode current is 10·5 mA and hence for a working control grid bias of −3 volts the bias resistance should be 285 ohms. The conversion conductance is 350 μA/V so that if the I.F. coil has a dynamic resistance of say 100,000 ohms the conversion gain will be 35.

The second curve plots g_c, r_a and I_k against control grid voltage for a fixed value of heterodyne voltage, that of a typical valve being shown in Fig. 34. It will be seen that increasing the bias decreases the g_c at a fairly linear rate at the same time raising the value of r_a. This curve enables the gain with A.V.C. voltage to be calculated at any point and also some idea to be obtained as to the maximum signal with A.V.C. that can be applied without cross-modulation.

Essentially similar curves are published for all types of multi-grid frequency changers.

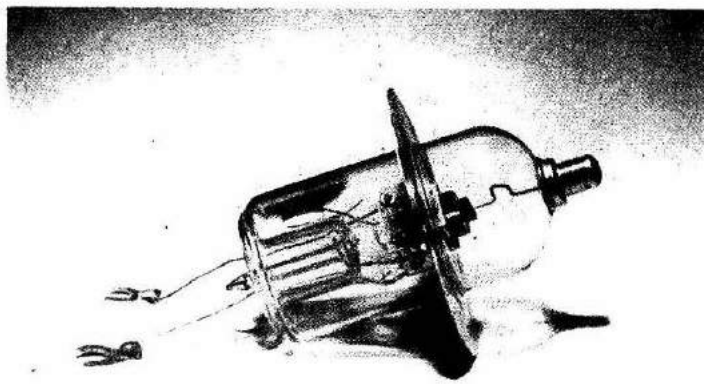

S.T. & C. type 3A/146J grounded grid triode. The top cap is the anode, the grid is part of the copper disc brought out through the glass, the edge of this disc is clamped to a metal chassis or screen. The flexible leads are the heater and cathode connections. When mounted through a screen the anode to cathode capacity is 0.035 p.F.

CHAPTER 7 POWER RECTIFIERS

THE following additional symbols are used in this Chapter:—

V_{rms}	R.M.S. voltage of transformer half secondary.
v_{pk}	Peak voltage of transformer half secondary.
I	Load current in amperes.
f	Supply mains frequency in cycles per second.
C	Condenser capacity in farads.
L	Choke inductance in henries.
N	Ripple factor.

Power Rectifier Circuits

There are three important circuits for the supply of direct current for radio and allied purposes from a single phase alternating current source. In order of popularity they are: Bi-phase half wave, half-wave and full-wave. The basic circuits are given in Fig. 35.

Bi-phase Half-wave

The circuit is arranged as in Fig. 35a. The R.M.S. voltage of the combined transformer secondary voltages is approximately twice the unidirectional output voltage and the current loading is such that the winding is not used very efficiently. Each half secondary only delivers current on alternative half waves, but the heating effect instead of being reduced to half the continuous rating is only reduced to $\frac{1}{\sqrt{2}}$ or 0·707 times the continuous rating. Therefore, the transformer must be designed for a continuous rating at least 40 per cent. greater than the required direct current output. The ripple voltage

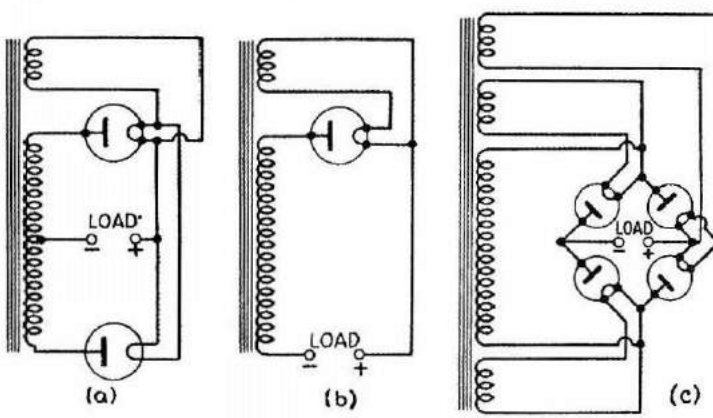

Fig. 35.

Rectifier circuits for single phase A.C. supply. (a) Bi-phase half wave. (b) Half wave. (c) Full wave.

will be at twice the mains frequency and a single filament winding only is required. The peak inverse voltage across the rectifier valve that is non-conducting is approximately equal to the peak voltage of the whole secondary, or three times the direct voltage output. This is the factor that mainly limits the voltage that any rectifier can handle.

Half-wave Rectification

Fig. 35b illustrates this circuit. The R.M.S. voltage is about equal to the output voltage and no transformer secondary taps are needed, but the winding remains inefficiently used as in the previous circuit. Since current flows in only one direction there is also appreciable D.C. magnetisation of the transformer core which further reduces the efficiency. Ripple frequency is the same as the supply frequency which makes smoothing more difficult, but the peak inverse voltage is only half that of the previous case. This circuit is not much used except for very light current applications or for direct rectification of the mains in transformerless power supplies. In the latter case indirectly heated rectifiers are used which are capable of withstanding considerable potentials between heater and cathode, and the heater supply is also obtained directly from the mains through a suitable dropping resistor.

Full-wave Rectification or Bridge Circuit

As in the half wave circuit, the R.M.S. voltage need only be as high as the direct output voltage but the secondary is used to full advantage, current flowing during both half cycles of the alternating current cycle. The rectifier inverse peak is about the same as the peak value of the secondary voltage and again a tapped secondary winding is avoided. Four rectifiers and three filament windings are essential. In the bi-phase circuit it is quite usual to have the two rectifying valves mounted in one bulb using a common filament system, and such a valve is frequently erroneously called a full-wave rectifier. Likewise it is possible to combine two of the four valves used in the full-wave circuit, but the other two must be separate. The output current is only the same as the bi-phase circuit for a given rectifier rating, but since the reverse peak is reduced to half, double the voltage can be obtained without exceeding the valve rating. Ripple voltage is at twice the mains supply frequency.

Smoothing Circuits

The remarks on ripple apply to the case where the output is applied directly to a virtually non-reactive load without the inclusion of any smoothing circuits. Since it is always necessary to reduce the ripple voltage for radio work some form of smoothing circuit will have to be included. The type of smoothing circuit used has a marked effect upon the operating conditions of the rectifier valves and two alternative circuits will be examined in some detail with reference to the bi-phase half wave circuit although the conclusions reached are broadly applicable to both the other circuits.

Condenser Input Filter

This is by far the most common arrangement and is shown in Fig 36a, while Fig. 36b, illustrates some of the wave forms that exist in various parts of the circuit. The line marked V_{a_1} is the voltage applied to the anode of valve $V1$ from one half of the secondary while V_{a_2} is the voltage applied to the anode of valve $V2$ from the other half of the secondary, only the potentials in

the positive direction being shown. The voltage wave of the cathodes and of the positive condenser plate is marked V_K. Starting from point A the condenser discharges into the load and its potential falls along the line AB. At B the anode-cathode potential of rectifier $V2$ is zero and a fraction of a second later the anode is positive to the cathode, and current flows through the valve, charging the condenser and raising its potential along the line BCD. After the point v_{pk}, the anode potential is falling and the cathode potential still rising so that at point D the valve becomes non-conductive and the discharge of the condenser recommences. It is clear from this that current can only flow through the valve for a very small part of each cycle and the peak current through the valve must be several times greater than the steady direct current output. It is necessary to ensure that this peak current will not exceed a safe value for the valve. It is impracticable to get an exact mathematical solution for the magnitude of the peak current or of the ripple voltage, but by making two rather arbitrary assumptions an approximate solution, near enough for normal conditions, can be obtained. The first assumption is that the resistances of the valve and transformer are negligible. The waveforms are then modified as shown in Fig. 37. The lines B v_{pk} D and BCD of Fig. 36 diverge because of the potential difference necessary to overcome the resistance of the valve and transformer, when

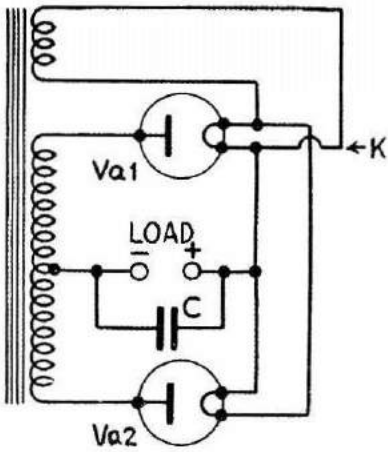

Fig. 36a.
Basic Circuit of full wave rectifier with condenser input filter.

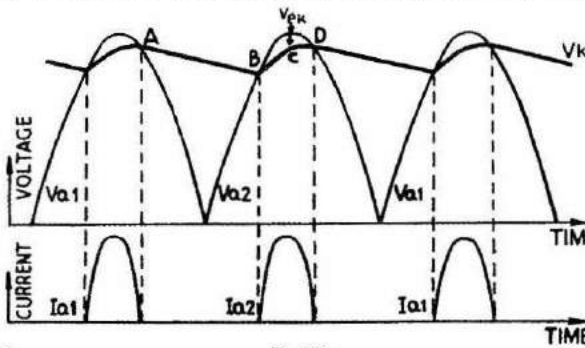

Fig. 36b.
Full wave rectifier with condenser input filter. Current and voltage wave forms.

current flows. In the resistanceless case they coincide. The second assumption is that the charging current, during the period of conductivity, is constant. Introduction of series anode resistances external to both the valve and the transformer is quite a normal method of reducing the magnitude of the peak current in cases where it is found to be too high, so that any calculation based upon an assumption of no resistance is likely to give too high a value for the charging current. On the other hand, the current during the conductivity period is not in practice constant but has a saw tooth form, so that the constant current assumption would give too low a value. Thus the errors tend to cancel, making the simpler solution sufficiently near to be of considerable help in design work.

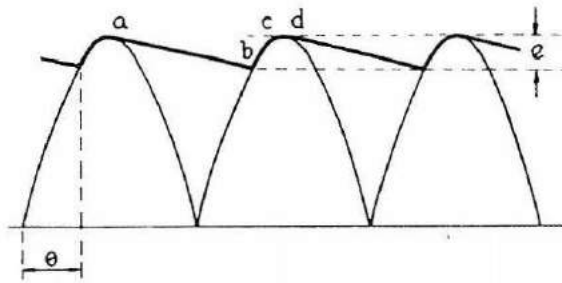

Fig. 37.

Voltage wave form of condenser input filter when valve and transformer are assumed resistanceless.

The formulæ are:—

$$\text{Sin } \theta = 1 - K - \frac{2K\theta}{\pi}$$

Where θ is the angular displacement at the onset of conductivity and $K = \frac{I}{4fC \quad V_{pk}}$

Ripple voltage, peak to peak $= e = V_{pk}(1 - \text{Sin } \theta)$

Output voltage nearly equals $V_{pk} - \frac{e}{2}$

Peak current $= I \times \frac{\pi}{\frac{\pi}{2} - \theta}$

$$\text{Ripple factor } N = \frac{\text{R.M.S. value of alternating Ripple voltage}}{\text{direct output voltage}}$$

$$= \frac{e}{\sqrt{2}\,(2v_{pk} - e)}$$

Illustrative examples have been worked out for three values of current, with a constant condenser size, and for three values of condenser with constant load current. The transformer peak voltage V_{pk} is taken as 500 volts, equivalent to 355 volts R.M.S. The results are shown in Tables 1 and 2.

TABLE 1.

Input Condenser = 8 μf.

Load mA	K	θ	Ripple voltage peak to peak	Output voltage	Rectifier peak current mA
50	0·0625	63°	55	478	335
100	0·125	54°	45	452	500
150	0·1875	46°	140	430	620

Examining these tables, Table 1 shows how the increasing load increases the period of conductivity (θ decreases) and partly offsets the increase in valve peak current that would otherwise be expected. At the same time the ripple is increased and the output voltage reduced. The reduced output voltage is an inherent feature of the circuit which, together with the high peak currents, limit the range of usefulness of the circuit to relatively low powers.

TABLE 2.

Load Current = 100 *mA*.

Input Condenser	K	θ	Ripple voltage peak to peak	Output voltage	Rectifier peak current mA
2 μf	0·5	22°	310	345	265
8 μf	0·125	54°	95	452	500
32 μf	0·03125	71°	30	485	950

Table 2 shows that larger condenser sizes reduce ripple and give a useful increase in output voltage, but put a severe strain on the valve. Makers often specify the maximum condenser size permitted for a given valve, usually about 16 μF. High peak currents are particularly damaging to mercury or gas-filled rectifiers and the condenser circuit is not suitable for use with them. The peaky nature of the current wave further raises the heating effect of the current in the transformer secondary, so that instead of the secondary rating having to be 1·4 times the output wattage a figure of 2·0 or even higher may be needed.

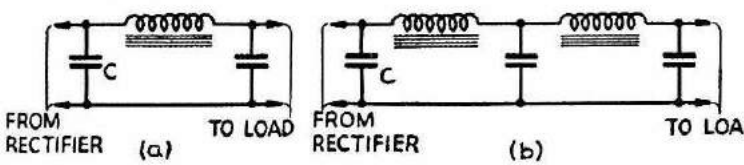

Fig. 38.

Additional smoothing circuit added to condenser input filter. "C" is the rectifier input condenser. (*a*) One section. (*b*) Two section.

Further reduction in ripple voltage over that obtained with a single condenser is usually needed and this can be achieved by adding an extra inductance-capacity section or sections as shown in Figs. 38a and 38b. Each section will reduce the ripple voltage to $\frac{1}{158f^2 LC - 1}$ of its previous value.

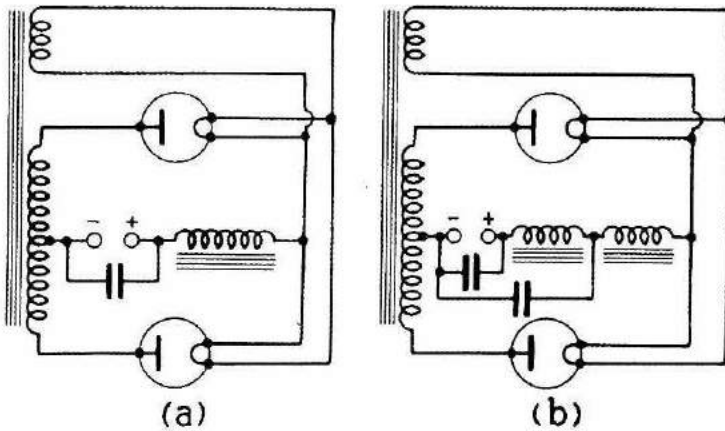

Fig. 39.
Choke input filters. (a) Single section. (b) Double section.

Choke Input Filter

It is equally possible to smooth the supply by using an inductance followed by a capacitance as in Fig. 39a, more sections being added if necessary to reduce the ripple as in Fig. 39b. Since it is only the first section that has any influence upon the valve operation subsequent sections are ignored in the following paragraphs.

Owing to the reactance of the choke, the effect of the condenser on the direct current performance is practically nil, unless the direct current falls below a certain value. As soon as the direct current becomes less than the peak value of the alternating current flowing through the choke, pulse charging of the condenser commences, the direct voltage output rising steeply on light loads to the same value as in the condenser input case. Provided that this condition is avoided however the rectifier current is continuous and the heavy peak currents, characteristic of the condenser circuit, are avoided. In a normally designed rectifier circuit the peak current should be only about twice the direct current output. The output voltage, ignoring losses in the resistance of the choke, valves and transformer, will be the average voltage of the transformer half secondary, that is the R.M.S. voltage multiplied by 0·9, except in the "light load" region. A comparison of the voltage performance of this type of filter with the condenser circuit is shown in Fig. 40.

The ripple factor N is given by the formula

$$N = \frac{0 \cdot 471}{158 f^2 LC - 1}$$ and the minimum

direct current load, to avoid the rising part of the characteristic curve is given by

$$I_{min} = \frac{V_{rms}}{10 L f}(0 \cdot 471 - N)$$

Usually N will be small enough to be neglected in this equation, but in the rare occasions when more exact information is required, the formula must be combined with the ripple factor equation and the pair solved as simultaneous equations.

Since it is only the ratio of direct to alternating currents in the choke which is important for good regulation, no harm results if the alternating current increases with the direct current. This is fortunate since by making the choke without an air-gap in the core it is possible to make a reasonably compact component that will have a high inductance at low values of direct current. At higher values of direct current, the core will saturate and the inductance will fall, increasing the magnitude of the alternating current at a time when the regulation will not be destroyed. This type of choke is called a "swinging choke." Whatever the inductance of the choke, however, it will inevitably have a large alternating potential across it and unless it is a well made article with substantial clamps it will emit a most irritating buzz due to lamination vibration.

Each additional choke-capacity filter section, if used, will reduce the ripple voltage by the same amount as given for the subsequent sections in the condenser case, the useful output being reduced only by that lost in the ohmic resistance of the choke.

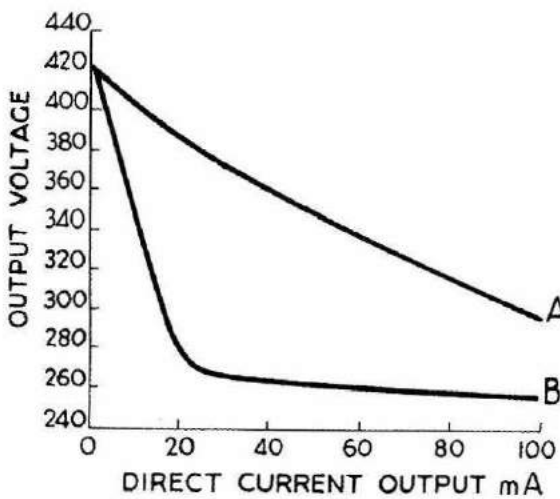

Fig. 40.
Typical regulation curves for rectifiers. (a) Condenser input filter. (b) Choke input filter.

CHAPTER 8 SPECIAL APPLICATIONS

Cathode Followers

IF a valve is operated with the output load in the cathode instead of the anode, this load is common to both grid and anode circuits and the arrangement is called a cathode follower.

Referring to Fig. 41 the input voltage V_{sig} is applied between grid and earth, and the output load R_k is connected between the cathode and earth, across which the output voltage V_{out} is obtained. The anode voltage $V_{a(b)}$ is supplied from a source of low impedance to the signal voltage V_{sig}. If at any instant V_{sig} is made more positive the grid potential will be more positive, the anode current will increase hence the cathode current will increase and the increased voltage drop across R_k will cause V_{out} to be in a positive direction also. From the above it is seen that the output voltage is of the same direction as that of the applied grid voltage, *i.e.* it "follows" the input voltage.

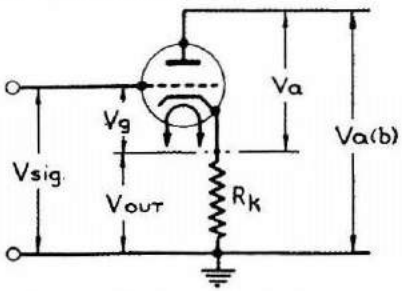

Fig. 41.
Basic circuit of a cathode follower.

The amplification of a *valve* is concerned with the applied voltage between grid and cathode, and this voltage V_g is not V_{sig} but $V_{sig} - V_{out}$. The higher the amplification of the valve the nearer V_{out} approaches in value V_{sig}.

The voltage gain of the stage is $\frac{V_{out}}{V_{sig}} = \frac{\mu R_k}{r_a + R_k(1 + \mu)}$

It is evident that if μ is large, and R_k is large compared with the anode impedance (r_a) then the gain is nearly unity.

Since the load is in the cathode lead both tetrodes and pentodes behave as triodes and the value of μ and r_a are those quoted for the valves connected as a triode.

With the load in the cathode the output impedance is no longer r_a but is reduced by a factor of $(\mu + 1)$ so that the effective output impedance

$$= \frac{r_a}{\mu + 1}$$

If μ is large, the expression approximates to $\frac{R_a}{\mu}$ or $1/g_m$. In the same

way the input capacity is reduced and the input capacity of the cathode follower is

$$c_{ga} + \frac{c_{in}}{\mu}$$

Since the cathode follower possesses a low output impedance, a high input impedance and low distortion due to the high degree of negative feed-back with a gain around unity, it behaves as an impedance matching transformer having very little loss over a wide frequency range.

The load in the cathode may be a resistor, a tuned circuit or a loaded transformer, but if a tuned circuit or transformer is employed, and if the impedance of either falls when off resonance, then the circuit will cease to act as a cathode follower.

In order to determine the operating conditions of a valve in a circuit such as Fig. 41, the I_a/V_a curves of the valve connected as triode are required. Such a set of curves is shown in Fig. 42 relating to a tetrode valve connected as a triode. Taking the value of R_k as 2,500 ohms and $V_{a\,(b)}$ as 500 volts,

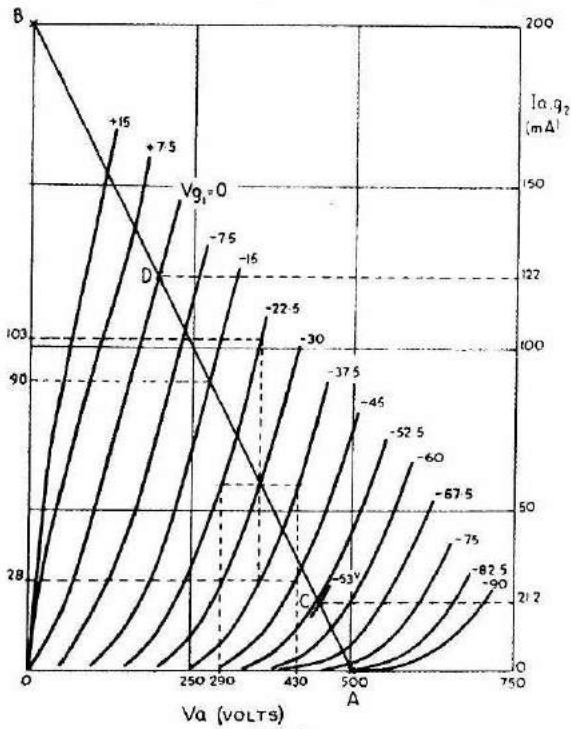

Fig. 42.
Characteristic curves of a typical beam tetrode output valve connected as a triode showing the load line when used as cathode follower.

the load line AB must be drawn from the $I_a = 0$, $V_a = 500$ point with a slope of 2,500 ohms. The curves are for values of V_{g_1}, i.e. the input signal V_{sig} less the output signal V_{out}. The operating point in the absence of any external grid bias will be such that $I_a \times R_k = V_g$ and this point must lie on the line AB and yet fit the characteristic curves. Only one point C satisfies this condition and that is $I_a = 21 \cdot 2$ mA and $V_g = -53$ volts. It is evident that this point is so situated on the load line that a very small signal can be accepted in a negative direction, hence some positive bias is required to bring the operating point nearer the centre of the line. At this point it would be convenient to redraw the curves as a dynamic curve plotting instantaneous values of input signal against anode current. Since the grid must not run into grid current or the input will no longer be high impedance, the grid can only operate down to zero bias point D, and the other extreme being cut-off point at approximately A. A dynamic curve is quickly plotted since at D, I_a is 122 mA, so that V_{sig} is $+ 305 - 0$ volts; at C, I_a is $21 \cdot 2$ mA so that V_{sig} is $53 - 53$ or zero volts, and at A, I_a is zero so that V_{sig} is $0 - 82 \cdot 5$ or $-82 \cdot 5$ volts. Similarly, at any intermediate point such as $V_g = -15$, $I_a = 90$ mA, V_{sig} is $+ 225 - 15$ or $+ 210$ volts. Such a dynamic curve is shown in Fig.

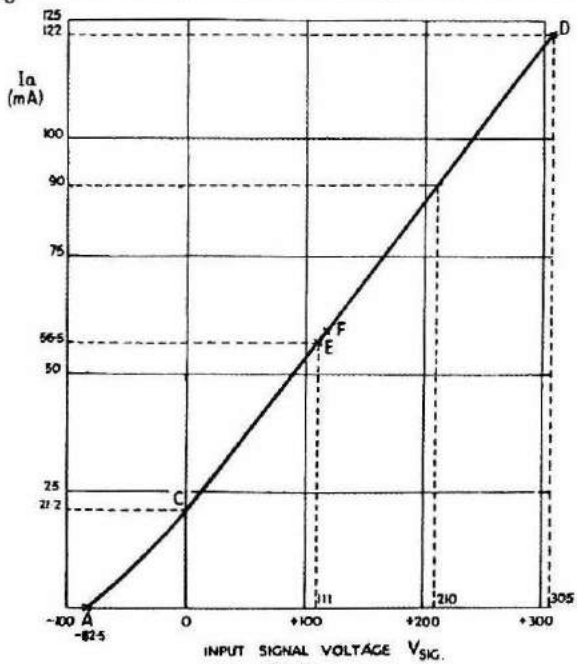

Fig. 43.
A dynamic characteristic showing the operating load line replotted from Fig. 42.

43 with the corresponding points marked. The curve is very nearly a straight line indicating low distortion. The range of input signal is from $-82 \cdot 5$ to 305 volts, giving a peak to peak value of $387 \cdot 5$ volts. Hence the maximum input amplitude is half this value or say 194 volts. This signal should be such that the input can swing equally either way, which is $305 - 194$ or $= 111$ volts point E. At E, I_a is $56 \cdot 5$ mA so the cathode voltage is 141 volts and the effective grid bias is $111 - 141$ or -30 volts. The operating point E is fixed by applying from some external source $+ 111$ volts to the grid usually from a potentiometer across the H.T. supply via the grid leak or earthy end of the input circuit. The grid leak may be of quite high resistance since the valve at no time draws any grid current.

The gain $= \frac{V_{out}}{V_{sig}}$ so that for example between points E and D the I_a change is $122 - 56 \cdot 5$ or $65 \cdot 5$ mA, therefore, $V_{out} = \frac{65 \cdot 5 \times 2{,}500}{1{,}000}$ or 164 volts for V_{sig} of $305 - 111$, or 194 volts, hence gain $= \frac{164}{194}$ or $0 \cdot 85$. This figure may be calculated another way because at $V_g = -30$ on the curves (Fig. 42) a change of plus or minus $7 \cdot 5$ volts in V_g is equivalent to change of 140 volts in V_a so the value of μ is $\frac{140}{15}$ or $9 \cdot 35$. The value of g_m at the same point is a change of I_a of $103 - 28$, or 75 mA for 15 volts change in V_g, giving a g_m of 5 mA/V. The anode impedance is, therefore, 1,870 ohms. Applying these figures in the formulæ for voltage gain given earlier, the gain $= \frac{9 \cdot 35 \times 2500}{1870 \times 2500\ (10 \cdot 35)} = 0 \cdot 845$.

Similarly the effective output impedance $= \frac{1870}{10 \cdot 35} = 181$ ohms and if the valve has a c_{ga} of $0 \cdot 7$ pF and a c_{in} of $11 \cdot 5$ pF then the effective input capacity $= 0 \cdot 7 + \frac{11 \cdot 5}{9 \cdot 35} = 1 \cdot 93$ pF.

The distortion can be calculated by measurement of the lengths of EF and AD in Fig. 43, F being the centre of the length AD. The percentage of 2nd harmonic distortion is $\frac{\text{E F}}{\text{A D}} \times 100$ which equals $1 \cdot 93$ per cent. in this example. At point E the anode current is $56 \cdot 5$ mA so the anode-cathode voltage $= 500 - \frac{56 \cdot 5 \times 2500}{1000} = 359$ volts and the anode dissipation $= \frac{359 \times 56 \cdot 5}{1000} = 20 \cdot 25$ watts. The anode to cathode voltage at point A is obviously 500 volts and at point D $= 500 - \frac{122 \times 2500}{1000} = 195$ volts. So that the power output $= \frac{(500 - 195) \times (0 \cdot 122 - 0)}{8} = 4 \cdot 65$ watts.

The above example provides all the necessary information to design a cathode follower output stage using a resistor as the output load. In the cases where the load is a tuned circuit or a loaded transformer the procedure is similar except that since the D.C. resistance of such a circuit is likely to be

very low, and unless the voltage drop in the resistance exceeds the normal grid bias, in which case a positive grid bias must be supplied, bias may be obtained by means of a resistor shunted by a large condenser in the cathode lead in the conventional fashion. The value of the autobias resistor as calculated is the value of the resistor plus any resistance present in the coil or transformer.

For a given valve it can be shown that the optimum load for minimum distortion is the same, whether the load is connected in the anode or the cathode, but in the latter case, *i.e.* the cathode follower, the distortion and output impedance are lower than in the former. It is also convenient at times to divide the load so that part of the load is in the anode and part in the cathode, this arrangement allows of a greater gain than as a true cathode follower, and less distortion and lower output impedance than when used as a conventional amplifier.

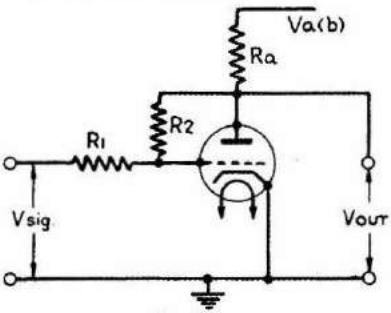

Fig. 44a.
Basic circuit of an anode follower.

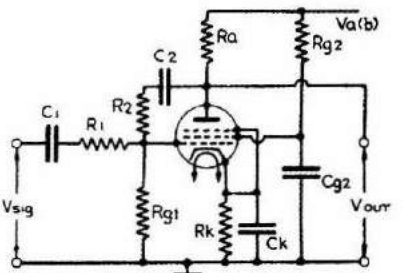

Fig. 44b.
Practical anode follower circuit.

Anode Followers

When it is desired to use a valve as a voltage amplifier with a wide frequency response together with a stable voltage gain so that it is independent of changes in supply voltages, valve replacements, etc., it is customary to apply a high degree of voltage feed back. When such feed-back is applied in a manner to be described the circuit is known as an anode follower.

The basic circuit is shown in Fig. 44a. Voltage feed-back is applied by injecting a known fraction of the output voltage V_{out} effectively in series with the input voltage, V_{sig}. The feed-back voltage V_f is obtained from V_{out} by means of the potential divider formed by R_1 and R_2 so that $V_f = \frac{R_1}{R_1 + R_2} \times V_{out}$. The actual input to the grid is $V_f + V_{sig}$, the feed-back being negative due to the phase reversal in the valve.

As the valve is to be used as a voltage amplifier it will be biased so that no grid current flows. V_{sig} will cause some current to flow through R_1, but since the grid takes no current it must also flow through R_2, and as the current is equal in each, if they are of the same value, the amplitude of the voltages will be equal. It is assumed that the gain of the valve is high, in other words the input to the grid is small. It follows, therefore, that the input

and output wave forms are equal in amplitude and the anode voltage follows the input signal. Two conditions are necessary that the above may be true. No current must flow from the junction of R_1 and R_2 either into the grid or through the grid leak, and the amplification of the valve must be high enough to ensure a grid amplitude small compared with V_{sig} or V_{out}. For this reason it is usual to employ a high slope tetrode or pentode. If R_1 and R_2 are not of equal value, but still have equal currents the amplitude of the voltage developed across them will be proportional to their resistance values. Thus if R_2 is greater than R_1 the output will be greater than the input; hence the amplification of the stage will depend on the ratio of the resistances and to a very large extent it will be independent of everything else. This amplification with feed-back is equal to R_2/R_1.

If the stage gain is n, then $R_2 = n \times R_1$. The values of R_1 and R_2 should be reasonably high compared with R_a. For example, if R_a is 500,000 ohms and a gain of 10 is required, R_2 should be 500,000 ohms, and R_1 50,000 ohms and this will load the preceding stage with 50,000 ohms. If a higher input impedance is essential R_2 should be increased to 2 megohms and R_1 proportionately to 200,000 ohms, giving an input impedance of 200,000 ohms.

The output impedance of the stage $= \frac{n+1}{g_m}$ ohms where n is, as before, the gain with feedback, or R_2/R_1, and g_m is in amps per volt. It is evident that if n has a low value and the valve slope is high the output impedance is quite low. When R_1 equals R_2 the impedance is $2/g_m$ or twice that of a cathode follower.

The basic circuit in Fig. 44a cannot be applied as it is shown, because there is no provision for preventing the D.C. from the anode reaching the grid and an input with no D.C. path would leave the grid floating. A practical circuit for a pentode is shown in Fig. 44b, here it will be seen that the blocking condensers C_1 and C_2 and the grid leak R_{g1} have been introduced as well as the normal decoupled autobias resistor R_k and the screen decoupling components R_{g2}, C_{g2}.

The values of the condensers C_1 and C_2 would at first sight appear to need to be very large, but in fact this is not so and the frequency response will be flat providing $R_1 \; C_1 = R_2 \; C_2$. In most cases suitable values are from 0·01 to 0·1 μF.

The value of R_{g1} would also appear to require to be very high, but in fact may be made equal to R_2 because if $R_{g1} = R_2$ and the gain without feed-back is 100 then only 1/100th of the current in R_2 will flow in R_{g1}.

At low frequencies R_{g1} should not be less than the impedance of the feed-back arm $R_2 \; C_2$, which increases with reduction in frequency.

As an example of the method of determining the operating conditions for such a circuit, although a high slope pentode would generally be used in practice, it will be convenient to use as an example the low slope pentode,

whose characteristics are shown in Figs. 3 and 4 of Chapter 2. The method described in that chapter can be applied to determine the values and gain without the feed-back. These values when determined can be applied to Fig. 44b as follows :—

With R_a 500,000 ohms voltage gain without feedback, A = 230, neglecting the succeeding valve grid leak, which is omitted in Fig. 44b.

Cathode resistor R_k = 3,800 ohms, screen resistor R_{g_2} = 2·6 megohms, output voltage = 62 volts R.M.S. and slope at the operating point 0·46 mA/V. If it is assumed that a gain of 10 is required from the anode follower then the ratio of the gain without feed-back to gain with feed-back is 230/10 = 23 and R_2/R_1 = 10, so that if R_2 = 500,000 ohms, then R_1 = 50,000 ohms. The input impedance will be 50,000 ohms and the output impedance $= \frac{(10 + 1) \times 1000}{0 \cdot 46} = 24{,}000$ ohms. The value of R_{g_1} can conveniently be given a value of 500,000 ohms, so as not to be low compared with R_2. If C_1 is made 0·1 μF then C_2 should be 0·01 μF.

The voltage gain of an anode follower $= R_1 \div \frac{R_2}{A}(R_1 + R_2)$ where A is voltage gain without the feed-back circuit. In the example A is 230, so the gain is 9·7 which is approximately the figure of 10 mentioned earlier. If at either extremes of the frequency response the gain without feedback had fallen ten times, then A would be 23 and the gain $= \frac{500{,}000}{50{,}000 + \frac{550{,}000}{23}} = 6 \cdot 7$.

So that a fall in gain of ten times or 20 *db* without feed-back becomes approximately 1·5 times or 3·5 *db* with feed-back.

The circuit described is quite applicable to the use of a transformer in the output instead of a resistor R_a, the value of the load being the impedance of the transformer and the calculations of gain without feed-back are then performed as described in Chapter 2.

The resistances R_1, R_2 and condensers C_1 and C_2 may be very conveniently switched in such a way that their ratios bear a constant relationship. This arrangement is very suitable for an amplifier which requires several fixed positions of gain, *e.g.* for use with an oscilloscope. If, due to wiring stray capacities, there is some capacity across R_2 this may be balanced by a small condenser across R_1, or vice-versa, so that the time constant of each is the same. The frequency response will then be unaffected.

Phase Splitters

There are many circuits not employing a transformer that may be used for the purpose of obtaining a push-pull output from a single ended input. They all basically comprise either a single or double valve arrangement using resistance capacity coupling. It is proposed to describe only a few of the methods.

Paraphase Amplifier

In this arrangement two similar triodes are used, the grid of the second valve being driven from the first valve to reverse the phase of the output. The arrangement is shown in Fig. 45a. V_1 is a normal R.C. coupled voltage

amplifier, its output appearing across R_1, R_2. The part of this output which appears across R_2 feeds V_2 which acts also as an R.C. coupled voltage amplifier providing the opposite phase. The ratio of R_1 to R_2 is adjusted so that $\frac{R_1 + R_2}{R_2}$ is equal to the voltage gain of V_2. Then the output voltages of both valves will be equal and opposite if $R_1 + R_2 = R_3$. The operating conditions for each valve are calculated by the method described for voltage amplifiers, but the values of R_1, R_2 are critical and are chosen to suit the voltage gain. The common cathode resistor has a value of half the value for each valve alone. The by-pass condenser may be omitted with some loss of balance at the higher frequencies.

Split-load Phase Invertor

This type uses a single valve, having half the load in the anode and half in the cathode as shown in Fig. 45b. With respect to the load in the anode the valve acts as a normal voltage amplifier but with the load in the cathode it forms a type of cathode follower. Since the current in both loads is equal, the voltages are equal if $R_1 = R_2$ and $R_3 = R_4$, but because of the negative feed-back the gain is reduced to a value of approximately unity. Since the ratio of the feed-back voltage to the output voltage $= \frac{R_1}{R_1 + R_2}$ and since $R_1 = R_2$, the feed-back ratio is 0·5. In other words a V_{sig} of 1 volt will produce a 1 volt across both anode and cathode loads. Since there is current feed-back as far as R_1 is concerned the output impedance will be increased, but as far as R_2 is concerned the impedance will be decreased, so that the source impedance from which the push-pull valves will be working will be unbalanced. Hence this type of phase splitter should not be used if the push-pull stage runs into grid current at any time or is operated other than strictly Class A1. The operating conditions should be determined as if the valve was working as an R.C. coupled amplifier with R_2 omitted and R_1 twice the value to be used. The effective output voltage will be half the value so calculated.

Cathode Coupled Phase Splitter

Two similar triodes are used with the input applied to the grid of one triode only, the other grid being undriven. The output is taken from the anodes, and the coupling between the valves is by a common resistor R_b in the cathode lead. The circuit is shown in Fig. 45c. With this arrangement the output voltages are balanced in amplitude and impedance and the voltage gain is about a quarter of that obtained for each triode used in a normal R.C. coupled amplifier. The value of R_b should be approximately $\frac{R_a}{2}$. The operating conditions are determined for each triode by assuming an anode load resistance of $R_a + (2 \times R_b)$ and a cathode bias resistance of $2 \times R_k$.

Anode Follower Paraphase Amplifier

If an anode follower is arranged so that it has a high degree of feed-back,

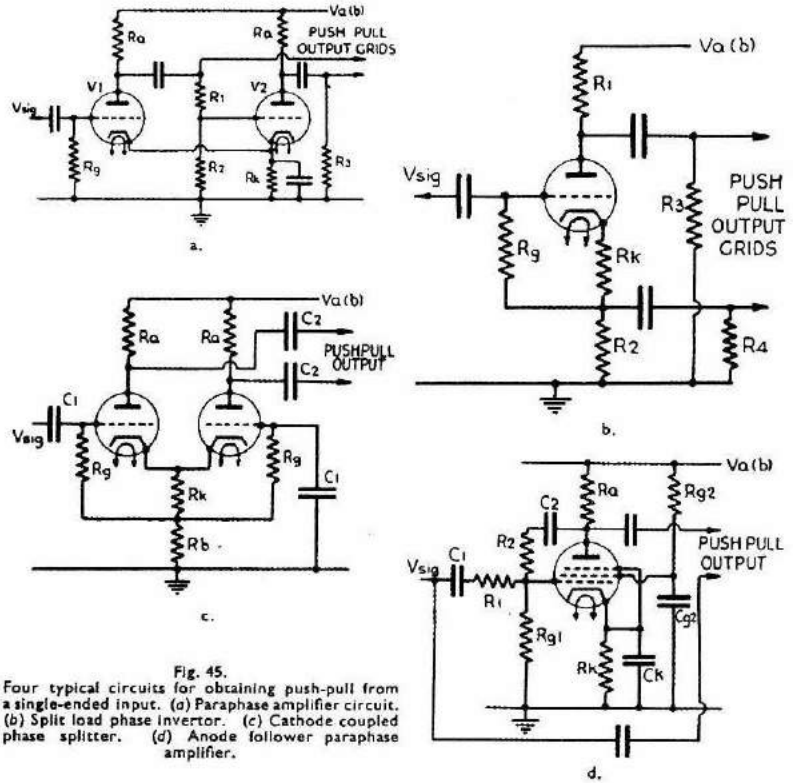

Fig. 45.
Four typical circuits for obtaining push-pull from a single-ended input. (*a*) Paraphase amplifier circuit. (*b*) Split load phase invertor. (*c*) Cathode coupled phase splitter. (*d*) Anode follower paraphase amplifier.

then the gain will be unity and the output will be equal in voltage but opposite in phase to the input. A circuit is shown in Fig. 45d. Referring back to the basic anode follower circuit, if $R_1 = R_2$ and $C_1 = C_2$ and if the voltage gain without feed-back is very high, then the gain = 1. The outputs have an impedance differing to some extent because one output has a value equal to the source impedance of V_{sig}, and the other is equal to $2/g_m$. The circuit constants, etc., are derived as for an anode follower.

Grounded Grid Amplifiers

Increasing use of higher frequencies has led to the development of a circuit in which the grid of a triode instead of the cathode is grounded. The basic arrangement is shown in Fig. 46 and it is to be noted that the grid is common to both input and output circuits. This has advantages over a conventional grounded cathode because the inter-electrode capacity common to the input and output circuits and which must be neutralised for stability is now the capacity between anode and cathode or filament, and with valves of modern

construction the value of this capacity is sufficiently low to permit a smaller neutralising condenser or frequently none at all, even at very high frequencies. The absence of such condensers reduces the limitation which this capacity imposes on the peak power output and useful anode voltage swing for a given bandwidth.

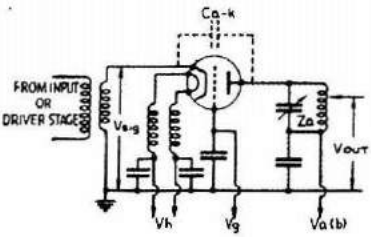

Fig. 46.
Basic circuit of a grounded-grid amplifier.

Since the driver stage feeding the cathode is effectively in series with the output load, some of the driving power appears in the output as useful power, but for this reason it is not usually possible to modulate a grounded grid amplifier alone, and some modulation must be applied to the driver stage.

When a grounded grid amplifier is used in a receiver as a voltage amplifier, the chief advantage is the higher gain achieved up to about 2,000 Mc/s. with a much improved signal to noise ratio, compared with conventional circuits.

As the input is applied to the cathode, degeneration is present and the input impedance is therefore low.

If Z_a is the output load impedance, then the input impedance $Z_{in} = \frac{Z_a + r_a}{1 + \mu}$ the values of r_a and μ being at the operating point.

The input power $= \frac{(V_{sig})^2 (1 + \mu)}{Z_a + r_a}$

The output power $= \frac{(1+\mu)^2 (V_{sig})^2 \times Z_a}{(r_a + Z_a)^2}$

The power gain is thus proportional to $\frac{Z_a}{Z_{in}}$ *i.e.* the ratio of the load impedance to the input impedance, so that a grounded grid amplifier can be regarded as an impedance transformer with a step-up ratio which is the opposite case to that of a cathode follower.

The cathode being at R.F. potential implies that the heater or filament voltage should be supplied via R.F. chokes or by an inter winding on the input coil. It is generally undesirable in using an indirectly heated cathode to dispense with these R.F. chokes, as this would place the heater-cathode insulation across the input voltage.

The optimum performance is to be obtained with valves especially designed for use as grounded grid amplifiers but quite useful performance may be obtained with valves designed for normal purposes, providing they have

low capacities, such as are afforded by use of an all glass base (button B7G), and have a reasonably high amplification factor μ. Pentodes may be connected as triodes for this purpose but in this case it is the μ as a triode which is relevant.

The gain and bandwidth obtained with grounded grid amplifiers is frequently disappointing. This is because due regard has not been paid to matching of the impedance both input and output. Particularly when used as a voltage amplifier, simple tuned circuits between stages generally result in a poor gain for a given bandwidth and a properly designed filter is preferable.

Fig. 47 shows a typical circuit of a two-stage grounded grid pre-amplifier. The input is applied to the cathode of V_1 via an input coil L_1 which has the heater supply interwound with the main winding. The output of V_1 is fed to the filter circuit comprising L_2 and L_3. L_3 also having an interwound heater supply. The low impedance output across L_3 drives the cathode of V_2. The output of V_2 is fed to a filter circuit comprising L_4 and L_5, the output being coupled to L_5.

The bias resistor for the two valves is R_3 decoupled close to each coil by C_3 and C_7. The heaters are by-passed by C_1, C_2, C_6 and C_8. The anode voltage is decoupled by R_1, C_4 and R_2, C_{10}, and fed to the anodes via R.F. chokes. All the coils are tuned by adjustable dust cores or metal plungers, and have no tuning capacity across them other than the stray capacities.

The operating conditions, such as grid bias, etc., are derived from the characteristic curves in a similar manner to that used for the same valve employing a normal grounded cathode.

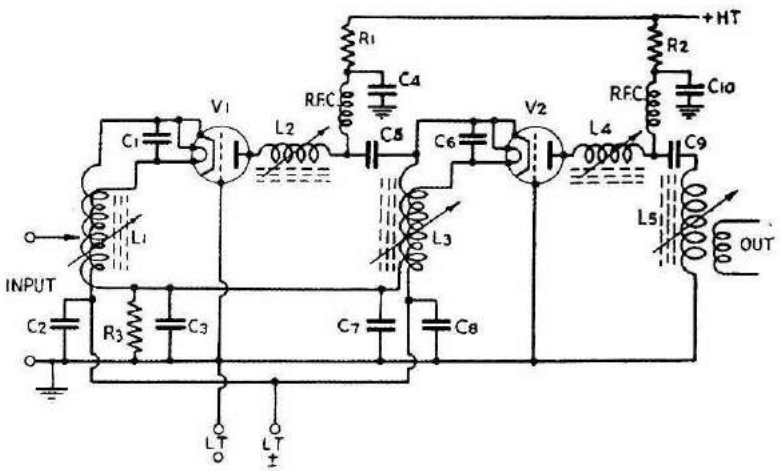

Fig. 47.
Typical circuit of a grounded-grid U.H.F. pre-amplifier. Gain approximately 20 db with 6 Mc/s. bandwidth at frequencies from 45-200 Mc/s.

CHAPTER 9 NOISE GENERATED IN VALVE AMPLIFIERS

MODERN designs of communication equipment frequently require the use of wider band widths or higher frequencies than were customary in the past, and in consequence the problems of both valve and circuit noise have become more prominent.

It is therefore considered that the inclusion in this book of the principles of noise calculations, even though they are primarily a circuit matter, is justified.

In any valve amplifier there are three primary sources of noise (*a*) Thermal agitation or "Johnson" noise in the circuits connected with the valve. (*b*) Valve or "Shot Noise." (*c*) Induced grid noise.

"Johnson" Noise

This is due to the fact that when current flows through any conductor, the electrons in the conductor do not move in a uniform steady manner, because the heat in the conductor causes agitation of the molecules of the conductor material giving rise to an unsteady movement. This unsteadiness causes a voltage drop across the conductor proportional to the current and to the resistance, and since the voltage is caused by random motion the voltage constitutes a random noise voltage and, therefore, occupies an infinite frequency band.

The value of the mean square noise voltage is given by:

$$4KTR\Delta f$$

where K = Boltzmans constant (Joules per degree Kelvin) = $1 \cdot 37 \times 10^{-23}$

T = Absolute temperature in degrees Kelvin;

Δf = the bandwidth in cycles per second;

R = value of the resistance in ohms or the dynamic resistance in the case of a tuned circuit.

The bandwidth Δf is the effective bandwidth or the area under the curve of the amplitude of the power versus the frequency, but for practical purposes little error results from taking Δf at the points on the curve where the power has fallen to one half or the voltage to 0·707 of its maximum value.

To take an example, consider a resistor of 100,000 ohms at normal room temperature connected to the input of an A.F. amplifier of having a bandwidth of 30 — 10,000 cycles. Δf is approximately 10,000, T is 293°K (273° + 20°), so that the noise voltage

$$= \sqrt{4 \times 1 \cdot 37 \times 293 \times 10000 \times 100000 \times 10^{-23}}$$

$$= 4 \text{ microvolts.}$$

Taking a further example of a television receiver designed for a video bandwidth of 3 Mc/s. and having the first tuned circuit loaded with 2,500 ohms, the dynamic resistance of the tuned circuit being assumed to be high compared with this figure. The total band width, assuming a double side band system, is 6 Mc/s.

The noise voltage from the input circuit is :

$$= \sqrt{4 \times 1 \cdot 37 \times 293 \times 6 \times 10^6 \times 2500 \times 10^{-23}} = 15 \cdot 5 \text{ microvolts.}$$

Fig. 48 shows a chart calculated from the formula given above for a normal room temperature, from which the value of the noise voltage may be found without calculation.

Shot Noise

This form of noise is generated in all electronic valves by random fluctuations in the anode current, and is so called because when amplified it sounds as if shot were falling on a metal surface. Although the noise is generated in the anode circuit, it is more convenient to refer to it as the noise which would be generated by an equivalent noise voltage applied to the grid. This process is quite simple because $\frac{I_a}{g_m} = V_g$. As the "Johnson" noise is calculated from the resistance value, it is in fact more convenient still to quote the Shot Noise not as a grid voltage but as an equivalent resistance (R_{eq}) which connected in series with the grid would generate the same value of noise.

The formula is the same as for "Johnson" noise but R_{eq} is substituted for R. Knowing the values for R_{eq} it is possible to compare the relative merits of different valves regardless of the bandwidth, whereas if the noise voltage were quoted the bandwidth would necessarily have to be stated for each case.

The value of R_{eq} is concerned with the mutual conductance of the valve

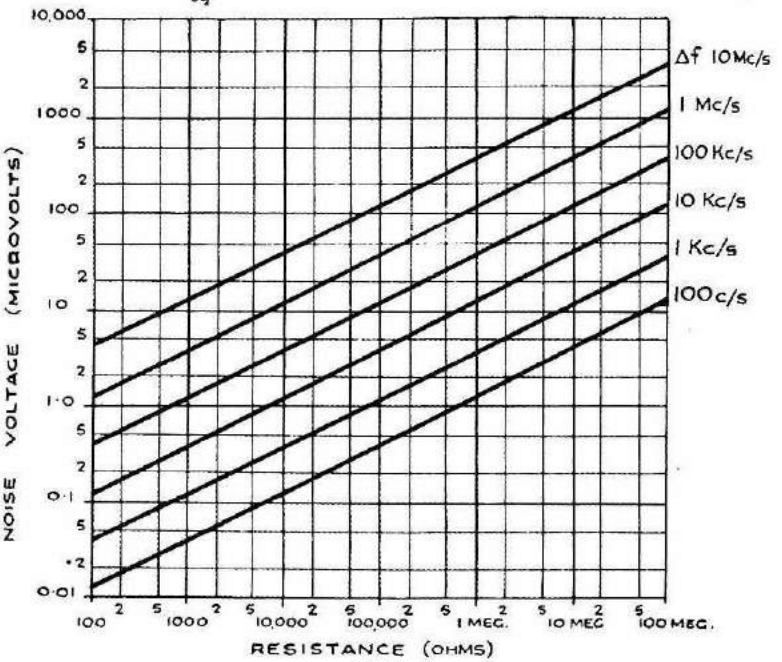

Fig. 48.
A chart for determining the noise voltage developed in different values of resistance for various bandwidths Δf at normal room temperature of 20°C.

and the total cathode current I_k. For pentodes the value is higher than triodes because the anode receives only a portion of the total cathode current and multi-grid valves such as frequency changers have a still higher value of R_{eq}, due to the poor ratio of anode current to total cathode current.

The values of R_{eq} in kilohms may be calculated as follows knowing the mutual conductance (g_m) or conversion conductance (g_c) in milliamps/volt at the working point.

For triodes used as amplifiers, $R_{eq} = \frac{2 \cdot 5}{g_m}$

For triodes used as frequency changers, $R_{eq} = \frac{2 \cdot 5}{g_c}$

For pentodes used as amplifiers, $R_{eq} = \frac{I_a}{I_a + I_{g_2}} \left(\frac{2 \cdot 5}{g_m} + \frac{20 I_{g_2}}{g_m^2} \right)$

For pentodes used as frequency changers, $R_{eq} = \frac{I_a}{I_a + I_{g_2}} \left(\frac{2 \cdot 5}{g_c} + \frac{20 I_{g_2}}{g_c^2} \right)$

For multi-grid frequency changers, $R_{eq} = 20 \frac{I_a (I_k - I_a)}{I_k \times g_c^2}$

For example the pentode valve used in Fig. 3 employed as an amplifier has an anode current of 2·3 mA, and screen current of 0·7 mA, and g_m of 1·2 mA/V at a grid voltage of –3, so the value of $R_{eq} = 9 \cdot 1 \times 1{,}000$ ohms, and the noise voltage for a 10 kc/s. bandwidth at room temperature 20°C. will be 1·2 microvolts.

Induced Grid Noise

There is a second form of noise present in a valve which is induced into the grid structure by the random fluctuations in anode current. The induced voltage on the grid is affected by the nature of the external impedance between grid and cathode. The input impedance of a valve comprises a resistive and reactive term. The resistive term is composed of the transit time effect and the inductance of the cathode lead. Both these are of negligible magnitude at low frequencies but at high frequencies become comparable with or lower in value than the external grid circuit impedance. The reactive term is that due to the capacitance and is not responsible for any noise. The induced grid noise for a valve having the control grid adjacent to the cathode is given by :

$$1 \cdot 4 \times 4 \times KTR_e \Delta f,$$

where R_e is the resistive component of the input impedance, and T is the Absolute cathode temperature.

The cathode temperature of most indirectly heated receiving valves can be taken as about five times the normal room temperature in degrees Absolute.

The input impedance of valves can be measured, and for valves intended for V.H.F. operation this figure is usually available from the manufacturers. If the cathode lead lengths are very short or two or more cathode leads are employed, it may be assumed that the figure quoted is the value R_e. This value varies quite considerably with frequency and may be neglected at frequencies below 10 Mc/s. Above this figure the value can be taken as

50,000 ohms at 20 Mc/s., 10,000 ohms at 50 Mc/s. and 2,000 ohms at 100 Mc/s. as a first approximation.

Calculation of Total Noise

Fig. 49 shows the equivalent circuit of a receiver input. The aerial will contribute some noise voltage depending upon its radiation resistance. If the coupling between the aerial and the grid involves a step up or down due allowance must be made for this by multiplying the aerial noise voltage by the turns ratio.

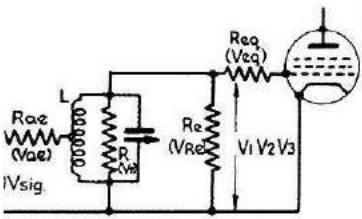

Fig. 49.
Equivalent circuit of noise resistances and noise voltages present in the input of a typical receiver.

R_{ae} = Aerial radiation resistance.
R = "Johnson" noise in the tuned circuit.
R_e = Induced grid noise.
R_{eq} = Shot noise.
V_{ae} = Aerial noise voltage.
V_r = Noise voltage due to the tuned circuit.
V_{re} = Noise voltage due to induced grid noise.
V_{eq} = Noise voltage due to shot noise.
N = Turns ratio of aerial coil L.

As the noise produced by each source is a random effect and is calculated on a power basis, the separate components cannot be added directly, but the total must be obtained by taking the square root of the sum of the squares, thus:

$$\text{Total noise} = \sqrt{V_1^2 + V_2^2 + V_3^2 + V_4^2 + \text{etc.}}$$

The voltages V_1, V_2, etc., are not, in fact, the calculated noise voltages, because if Fig. 49 is examined it will be clear that the noise voltage generated by the aerial, after being stepped up by the ratio of the aerial coil, is in parallel with R and R_e and these resistances absorb some of the noise and it does not, therefore, all reach the grid of the valve. This applies also to the other noise voltages.

Referring again to Fig. 49, in order to find the noise voltage of the aerial as applied to the grid, if V_{ae} is the noise voltage generated by the aerial, calculated by using the value R_{ae} in the "Johnson" noise formula, and N is the step up turns ratio of the coil, then the value of V_1, the effective value applied to the grid of V_{ae} is calculated as follows:

$$V_1 = \frac{V_{ae} \times N}{(R_{ae} \times N^2 + \frac{R \times R_e}{R + R_e}} \times \frac{R \times R_e}{R + R_e}$$

Similarily V_2 is the effective value of V_r.

$$V_2 = \frac{V_r}{R + \frac{R_{ae} \times N^2 \times R_e}{(R_{ae} \times N^2) + R_e}} \times \frac{R_{ae} \times N^2 \times R_e}{(R_{ae} \times N^2) + R_e}$$

and V_3 is the effective value of V_{re}

$$V_3 = \frac{V_{re}}{R_e + \dfrac{R_{ae} \times N^2 \times R}{(R_{ae} \times N^2) + R}} \times \frac{R_{ae} \times N^2 \times R}{(R_{ae} \times N^2) + R}$$

To take a practical example, consider Fig. 49 to be a stage of the television receiver referred to earlier. If the aerial is a dipole of 70 ohms (R_{ae}), and the receiver band width is 6 Mc/s., V_{ae} at room temperature calculated by the "Johnson" noise formula is 2·6 microvolts. The noise due to the tuned circuit, if this is loaded with 2,500 ohms (R) as before, was earlier calculated to be 15·5 microvolts so that this is the value of V_r. If the first valve is an R.F. pentode having a mutual conductance of 7·5 mA/V, an anode current of 10mA and a screen current of 2·5 mA, then the "Shot" noise equivalent resistance R_{eq} is 970 ohms, and for the same bandwidth using the same formula the value of V_{eq} will be 9·7 microvolts. If the valve has an input impedance (R_e) of 6,000 ohms at 45 Mc/s. then the value of induced grid noise voltage V_{re}

$$= \sqrt{1{\cdot}4 \times 4 \times 1{\cdot}37 \times (5 \times 293) \times 6 \times 10^6 \times 6000 \times 10^{-23}}$$

$= 63{\cdot}5$ microvolts.

The effective value of the noise applied to the grid due to the aerial if the turns ratio N of the aerial coil is 5 : 1

$$= V_1 = \frac{2{\cdot}6 \times 5}{(70 \times 5^2) + \dfrac{2500 \times 6000}{2500 + 6000}} \times \frac{2500 \times 6000}{2500 + 6000} = 6.5 \text{ microvolts.}$$

Similarly

$V_2 = 5{\cdot}5$ microvolts

and $V_3 = 9{\cdot}3$ microvolts.

The Shot Noise voltage must then be added to the above voltages. This voltage is not affected by the resistance in parallel because it is considered as a noise voltage in series with the grid.

Thus the total noise voltage

$$= \sqrt{9{\cdot}7^2 + 6{\cdot}5^2 + 5{\cdot}5^2 + 9{\cdot}3^2} = 15{\cdot}9 \text{ microvolts.}$$

In a receiver it may happen that there is considerable noise produced by the second stage if the first happens to be an R.F. stage and the second a frequency changer. In this case the noise generated by the second stage comprising R, R_e and R_{eq} is totalled, and referred back to the grid of the first stage by dividing the value obtained by the gain of the first stage, when it is then added to the four sources of noise already present, making a fifth term in the total noise formula.

The example worked out indicates that the value of total noise is the result of various factors and reducing one alone would not reduce the noise very much. Although the induced grid noise is quite a large figure its effective value is so reduced by the other parallel resistances that it does not contribute nearly as much to the total noise as might be expected.

CHAPTER 10 VALVES FOR V.H.F.

NORMAL TYPES OF VALVES FOR OPERATION AT V.H.F.

Frequency Limitation

THE main limitations to the operation of valves at very high frequencies are due to lead inductance, inter-electrode capacities and transit time. These limitations apply whether the valve is used as an amplifier or as an oscillator. Oscillation will be possible at a slightly higher frequency than the limiting frequency for useful amplification, but the difference is small.

The effects of lead inductance and internal capacities are mainly troublesome because they occur together; if either factor could exist alone it would not be so difficult to manage. The capacities, if they existed alone, would simply form part of the tuning circuits. At high frequencies the reactance of these capacities falls, and the capacitive current increases and may assume a considerable magnitude. This current has to flow through the lead inductance, the reactance of which will be increasing as the frequency is raised, and the H.F. ohmic resistance of the lead which will also increase with frequency. The result is that the loss in the ohmic resistance is increased and the internal grid voltage is not in phase with that supplied by the external circuit. An apparent phase displacement also arises from the finite time of electron flight, with the result that any change in the density of the electron stream will not be felt at the anode until a moment later. If this delay becomes an appreciable part of a cycle, as it may at V.H.F., it is tantamount to a phase shift. These phase shifts and losses additively introduce so much circuit damping that amplification and oscillation become impossible.

It follows, therefore, that in order to achieve satisfactory operation at the higher frequencies these effects must be reduced as far as possible. Lead inductance and resistance can be reduced by use of short thick electrode leads, the highest frequencies being reached by making the electrode and its lead into one component, which becomes a part of a resonator system, such as long line or cavity. Alternatively two or more parallel connections may be made to the same electrode either to separate terminals or to one terminal. Cathode lead inductance is particularly troublesome because it is common to both grid and anode circuits. Where twin cathode leads are brought out to separate terminals they are used to isolate these paths as shown in Fig. 50.

To reduce transit time it is necessary, for a given anode potential, to reduce the anode to cathode clearance, which in turn will raise the capacities unless the areas of the electrodes can be proportionately reduced. The smaller electrode areas are desirable even if no reduction of clearance is considered, but the reduction in area, particularly of the anode, may impose a severe dissipation limitation. A reduction in transit time is also possible by raising the anode potential, but as the time of flight is proportional to the inverse of the square root of the voltage the latter becomes prohibitively high before any major decrease has been achieved.

"Television" Type Pentodes

In order to achieve the wide bandwidths needed for television I.F. amplifiers it is necessary to introduce resistance damping in the tuned circuits; it is obviously not worth while going to a lot of trouble to reduce valve damping and the first attempts to raise the frequency of operation were made simply by making high slope versions of normal valves. The higher slope

demands larger cathodes and grids with reduced grid to cathode clearance so that the input impedance is very low. Unless associated with some form of construction which enables a marked reduction in lead loss to be achieved, these valves are not very useful, except in wide band amplifiers. The frequency limit is about 50 Mc/s.

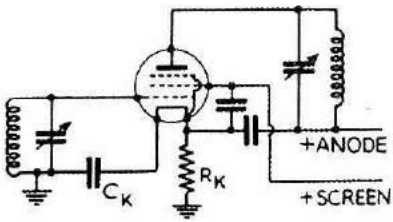

Fig. 50.
Arrangement of a valve, with two cathode connections, to ensure isolation of anode and grid circuits. R_K is the normal bias resistor and C_K is the bias by-pass condenser.

" Acorn " Valves

These are miniature editions of normal electrode structures mounted directly on thick electrode leads which come straight through the glass wall to connect to the circuit. The miniature construction results in a considerable reduction of capacities and transit time and the lead inductance and resistance is also greatly reduced. The valves will operate most successfully up to about 500 Mc/s., the only troubles being the very limited dissipation and the high manufacturing costs.

" All Glass " or " Ring Seal " Valves

A very great improvement in performance of valves of more or less normal construction has been achieved by abandoning the pinch type of seal in favour of the ring seal method.

The electrodes are mounted directly on short pins passing through a glass disc, the pins themselves forming the contacts for insertion into the valve holder. The bulb is afterwards placed over the mounted electrodes and united with the edge of the glass disc. No great reduction of capacities within the electrodes themselves is achieved but the additional capacity existing between the leads of a pinch type valve has been almost eliminated and the lead inductance and resistance has been considerably reduced. The majority of the American " all metal " valves fall into this class as of later years they have used the glass disc construction, the edge of the disc being sealed to the metal shell. The leads are not stiff enough to act as contacts, so they are connected to pins inserted into the base wafer. The true " all glass " valves are the American Loctal (B8G) and the British B9G ranges. The upper frequency limit of these valves is about 150 Mc/s.

A recent development has been the use of miniature valves of all glass construction on a seven pin base (B7G). The American "9000" series are direct equivalents of the " acorns " with this form of construction. Their frequency limit is not quite so high as the true acorns, but they are easier to manufacture and are, therefore, cheaper. A number of British and American valves have been introduced using this base and both battery and mains versions are available. They are effective up to 300 Mc/s., but there is a large variety of types and this figure is only a very rough guide.

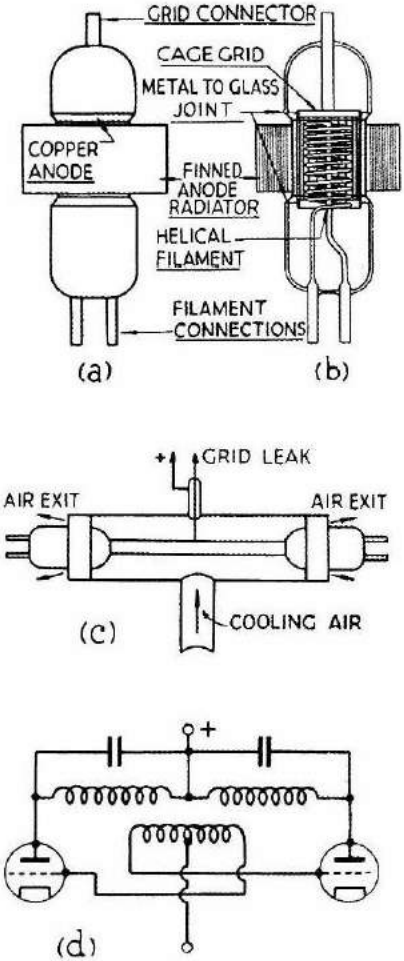

Fig. 51.
Concentric construction of a transmitting valve. (*a*) External appearance. (*b*) Cross-section. (*c*) Concentric line oscillator. (*d*) Equivalent circuit of Fig. 51c.

" Concentric " Valves

Transmitting valves capable of up to 200 watts dissipation, with forced air cooling, have been developed to operate up to approximately 250 Mc/s. They are intended to work with tuned circuits consisting of concentric line tuning units and they are built to form part of these lines. A sketch of a valve of this type is shown in Figs. 51a and 51b, while Fig. 51c shows one form of the concentric line tuning system.

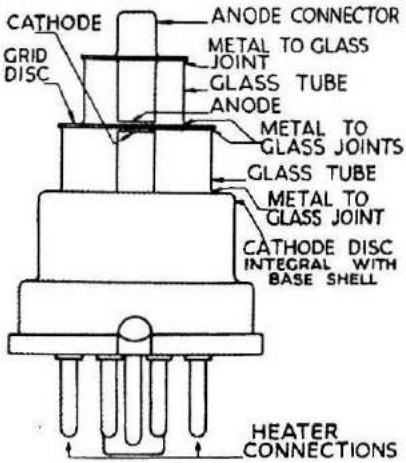

Fig. 52.
Planar Triode valve or " Lighthouse " tube.

Disc or Planar Valves

This form of construction, although very costly, has permitted the effective range of the ordinary negative grid valve to be extended well into the micro-range region. The amateur 2,300 Mc/s. band is just about within their reach. Fig. 52 shows the method of construction. Their appearance has given rise to the popular name of " lighthouse " tubes. It will be noted that the effective cathode and anode areas are very small, the former demanding a very high emission in terms of milliamperes per square centimetre, and the latter restricting the dissipation considerably. The valves are intended to be used with cavity resonators as tuning elements, and to achieve the highest possible frequencies the valves themselves must become a part of the resonator system. Fig. 53 shows a grounded grid version of the tuned plate-tuned grid oscillator built with cavity resonators.

It is interesting to note that the shielding action of the grounded grid so isolates the anode and cathode circuits that, for oscillation, external feed-back has to be provided by means of inter-connected loops, the equivalent diagram looking like the familiar link coupling.

SPECIAL VALVES FOR MICROWAVES

Cavity Magnetrons

The old type of magnetron oscillator is a diode with a cylindrical and concentric cathode and anode, the anode being split into two or more segments,

placed in a magnetic field parallel to the cathode. Tuned circuits are connected across the segments of the anode, or between the anode and cathode.

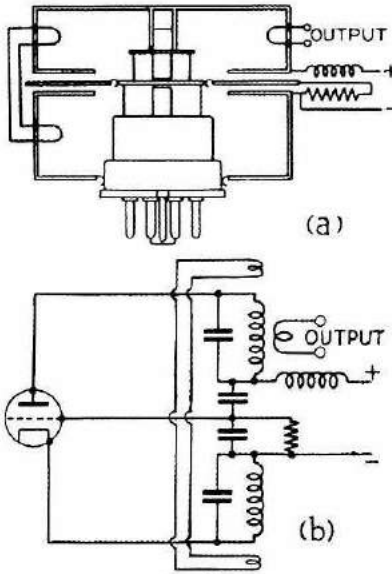

Fig. 53.
Planar Triode in resonant cavity system.
(a) Physical arrangement. (b) Equivalent circuit.

A recent modification of the magnetron utilises tuned cavities in place of the anode segments, so that the tuned circuit is built into the valve itself. The anode assembly is made from a solid copper ck or built up from punched laminations, the internal construction taking the form of a series of holes arranged round the internal periphery of the block, each hole being coupled to the cathode region in the centre by means of narrow slots (Fig. 54). The number of holes increases with the frequency of operation (being usually 8 for a 10 cm. valve and 14 for a 3 cm. one), the R.F. output being taken from one of them *via* a coupling loop. The magnetic field is almost invariably provided by a permanent magnet placed externally to the anode block so that the field is at right angles to the ring of cavities, *i.e.* parallel to the cathode. In some designs the magnet is an integral part of the valve structure ("package" magnetrons) and cannot be separated.

The mode of operation of the valve is similar to that of the older type, which is already well covered in the literature, but a very brief description is as follows. Due to the axial magnetic field the path of the electrons leaving the cathode is curved, and for a certain value of field the electrons fall short of the anode and return to the cathode, travelling in circular orbits. The time taken for an electron to leave the cathode, travel round and return, determines the frequency of oscillation, the cavities being tuned to this frequency. Energy associated with the moving electrons will be given up to the space round the cathode whence it will be transferred to the tuned cavities and picked up by the coupling loop.

The valve may operate in different modes, the change from one to another being characterised by a sudden change in frequency. By "strapping" alternate cavities, *i.e.* connecting equipotential points by a copper link so that alternate cavities oscillate in phase, much more stable operation is achieved and the output is increased.

By means of this type of construction the cavity magnetron may have an efficiency as high as 65–70 per cent. and under C.W. conditions up to 100W output may be obtained at 1 cm. wavelength. A magnetron is not conveniently modulated in the ordinary way, although modulation be effected on the anode, and the valve is usually operated under pulse conditions. The H.T. voltage is applied in the form of pulses of the order of a few microseconds

in duration and of high energy content so that the valve is working only for the very short time of application of the pulse. Enormous peak powers have been obtained by pulse modulation, several megawatts being common in radar applications. It is the pulsed cavity magnetron which made possible centimetric radar and the valve is pre-eminent as a high power generator of microwave frequencies.

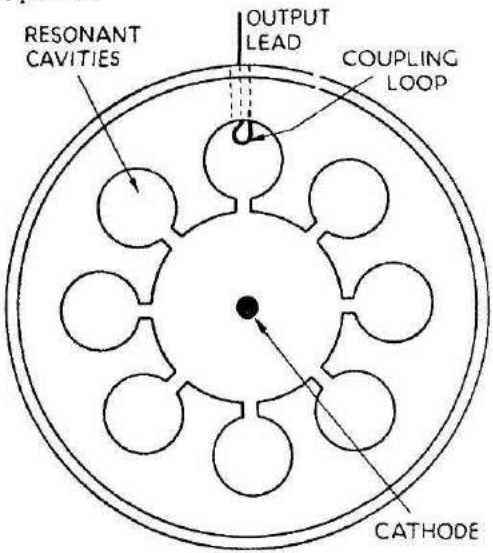

Fig. 54.
Anode block of a cavity magnetron

Velocity Modulation

By passing an electron stream through special electrode structures (Fig. 55), to which is applied a R.F. field, the stream may be velocity modulated, as parts of it will be speeded up and parts slowed down, due to the action of the field. Energy in the R.F. field is thus transferred to the electrons. By means of suitable devices this velocity modulation may be changed to amplitude modulation and the beam energy transferred to an output circuit.

Three different conversion methods are possible, (1) by deflecting the beam, (2) by applying a retarding field, and (3) by allowing the beam to drift in a field-free space. A magnetic field at right angles to the beam will effect deflection conversion since the slower moving electrons will be deflected through a larger angle than the faster moving ones and the main beam will split up into two smaller charge-density modulated beams. An electric deflecting field may also be employed. Retarding field conversion is done by allowing the electron stream to approach a negative potential electrode. Only the faster moving electrons will have sufficient kinetic energy to continue and be collected at the electrode, the slower ones being retarded and ultimately returned along their own path. This reflected stream is charge-density modulated and will supply R.F. energy to an electrode system placed in its path.

If a velocity modulated beam is allowed to pass through a field-free space (known as a "drift space"), the faster moving electrons will begin to overtake the slower ones, so that at some point along the beam alternate regions of high and low electron density will exist, *i.e.* the beam has become bunched and is now charge-density modulated at this point. The length of the drift space to produce bunching will depend on the magnitude of the radio frequency voltage existing across the electrode structure which is used to produce the velocity modulation. Only a very small voltage is necessary to produce deep amplitude modulation, provided that the drift space is long enough, since the electrons will in time sort themselves out into bunches even if there is only slight velocity modulation when the beam leaves the modulating electrodes. However, very long drift spaces are not a practical proposition since space charges may be set up in them which have a deleterious effect on the bunching action.

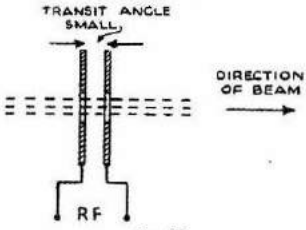

Fig. 55.
Velocity modulating grid.

It has been shown that at some point in the drift space the beam has become charge-density modulated, but the electrons in the bunches have different velocities and if the beam were allowed to continue to drift in field-free space they would un-sort themselves after a certain time and again bunch themselves. Thus in a long velocity modulated beam passing through field-free space there will be several equally spaced regions of charge-density modulation along the beam, the maxima being spaced by a transit angle of 2π radians. To abstract the energy from the beam it is only necessary to arrange for the output circuit to be placed at a point of maximum charge-density modulation.

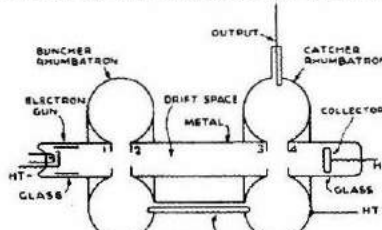

Fig. 56.
Klystron oscillator.

Double Resonator Klystrons

The klystron valve is a particular case of velocity modulation conversion by means of a drift space and is one of the more successful types. Fig. 56 shows such a valve. It contains an electron gun similar to that in a cathode ray tube, from which a narrow beam of electrons is projected along the axis of the tube and focused so that it will pass through the small apertures 1, 2, 3 and 4 across which the oscillating circuits are connected. The resonant circuits are of the cavity type and consist of hollow toroidal chambers, known as "rhumbatrons." The oscillating currents in this type of circuit flow on the inner surface of the chamber and there will be a high radio-frequency voltage across the neck 1, 2.

Suppose that the valve is oscillating, and ignore for the moment the length of concentric line connecting the two rhumbatrons. The electron beam from the cathode, accelerated by D.C. potential of perhaps several thousand volts applied to the body of the tube, will pass through the aperture 1, 2, across which there is a R.F. potential. This will cause velocity modulation of the

beam in the manner described. The velocity modulated beam then enters the field-free space between the two rhumbatrons, the drift space, where the faster electrons will begin to overtake the slower ones and the beam will become bunched. It should be noted that bunching in a drift tube really amounts to electron focusing in space and time. The distance between grid 2 and grid 3 is so arranged that the beam is bunched and de-bunched several times prior to reaching this grid. If we now assume that when the bunches of electrons arrive at the second rhumbatron (the catcher) the electric field across the neck 3, 4, is adverse, the electrons will be decelerated in their passage and their lost energy is imparted to the field, and hence to the catcher rhumbatron. The electrons are retarded almost to zero velocity in their passage through the gap 3, 4, and are removed by a collector electrode which may be at the same potential as the body of the tube.

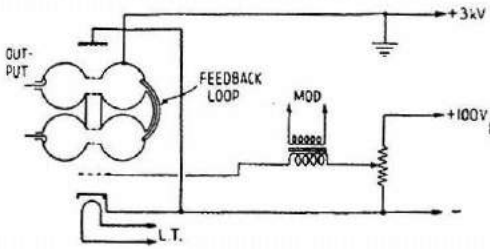

Fig. 57.
Power connections of a klystron.

If oscillation is to be maintained the beam must be bunched when it enters the catcher rhumbatron and the phase of the R.F. voltage across the neck of the catcher must be such as to retard the bunches of electrons entering the aperture. This latter is easily arranged by feeding energy from the catcher to the buncher rhumbatron by means of a short length of concentric line, the length of which is varied so as to establish the correct phase relationship between the voltages across the two rhumbatron necks. Radio frequency energy is taken from the catcher rhumbatron by means of a short length of concentric line connected to a coupling loop which is inserted in the rhumbatron, and which couples to the magnetic field round the axis.

Modulation is usually effected by applying speech voltages to one of the focusing grids and thus varying the intensity of the electron beam passing through the necks of the rhumbatrons, although other methods are possible and in certain cases give superior results. Fig. 57 shows a typical circuit for the operation of a klystron valve; it will be noted that as is common in cathode ray tube work, the positive side of the H.T. supply is earthed. This is because the external metalwork of the valve is connected to the rhumbatrons and would otherwise be at a high potential. By suitable connections the klystron may be used as an amplifier, mixer or detector as well as an oscillator and thus have advantages over some other types of microwave valves. When the klystron is used as an amplifier the length of concentric line connecting the rhumbatrons is removed and the signal to be amplified is fed into the buncher rhumbatron. In the case of valves intended only for oscillator work, a permanent feedback line between buncher and catcher can be used, and such a line is frequently built-in the valve so that although it has two resonators there is only one external connection, that for the output. Klystrons are not now often used for transmitting work, except sometimes as frequency multipliers, and certainly in all high power work have been

superseded by the cavity magnetron. They retain, however, a certain usefulness in receiver and instrument work and in low power applications.

Reflector Klystrons

This type of oscillator is rather similar in principle to the double resonator klystron but employs only one resonant circuit or rhumbatron and is intended mainly for use in microwave receivers where only a small amount of power is required. Fig. 58 shows the arrangement of a typical valve. The electron beam is focused so as to pass through the aperture in the rhumbatron and is thus velocity modulated on leaving. It then approaches a reflector electrode which is at a potential near that of the cathode, and may be either slightly positive or negative to the cathode. If it is at the cathode potential or slightly more positive, the velocity modulated beam, after leaving the modulating grid, enters a negative potential gradient and the part of the stream which possesses average, or more than average, kinetic energy will reach the electrode and give rise to reflector current. Part of the stream with kinetic energy below average will be retarded and turned back towards the cathode. This part of the stream is intermittent and is charge-density modulated.

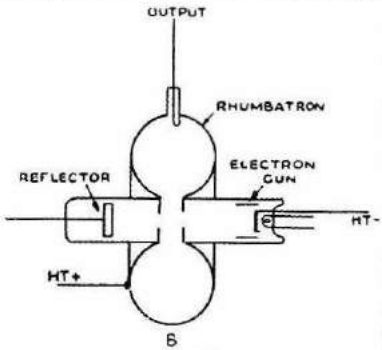

Fig. 58.
Arrangement of a typical reflector klystron.

Thus for oscillation to be maintained it is only necessary to arrange that the returning bunches of electrons are retarded during their second passage through the rhumbatron. If the reflector is operated with a potential negative to the cathode, no reflector current will flow and the entire beam will be reflected. In this case the returning beam is velocity modulated and becomes bunched when it enters the rhumbatron for the second time.

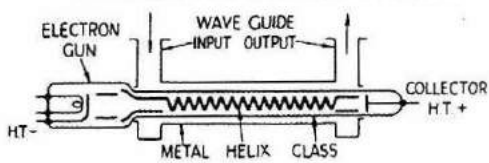

Fig. 59.
Travelling wave valve.

The reflector klystron is a very convenient valve and although it is obvious that it can be used only as an oscillator, it possesses considerable superiority over the double-resonator type for low power work. The reflector distance may be much shorter than the corresponding drift space in the double resonator valve due to the double transit of the electron beam and to the low velocity of the beam over part of the travel. There is only one resonator to tune compared with the two of a double resonator valve, which must be kept simultaneously and accurately in tune if any efficiency is to be realised. In other words, the buncher and catcher are always tuned to the same frequency as they are the same resonator. This advantage becomes peculiarly

apparent when the trouble of initially setting up a double valve has been realised. Reflector valves have attained a wide popularity as local oscillators in microwave receivers, due to this ease of tuning and their smallness and cheapness of construction.

Travelling Wave Valves

The basic principle of the magnetron oscillator is the interaction between a travelling electric field (rotating around the anode block) with an electron stream travelling at about the same order of velocity and this principle has been applied to a particular type of microwave amplifying valve. In the klystron the signal is used in the form of a stationary electric field applied to a rhumbatron, but the travelling wave valve, as implied in the name, uses the signal in the form of a travelling electric field which exchanges energy with the electron stream of the valve. The electric field travels at the ordinary velocity of electric radiation (3×10^{10} cms./ sec.) and has, therefore, to be slowed down to a reasonable velocity which can be given to an electron stream without recourse to excessive accelerating voltage.

This is done by making the wave travel down a helix of wire so that although the wave travels round and round the helix turns at roughly its normal velocity, its axial velocity along the length of the helix is reduced to about one-tenth of that value. If the electron beam is sent down the centre of the helix (Fig. 59) it will be charge-density modulated, *i.e.* amplitude modulated, due to the interaction of the magnetic field of the helix with the electrons. This modulation grows along the length of the helix, roughly according to the square of the axial distance from the beginning of the helix. By suitable design this modulation can transfer energy to an external collector at the end of the helix and more energy can be extracted than was put in by the original signal, or in other words, the helix-electron beam mechanism is an amplifier. Some of the D.C. energy in the electron stream is being converted into A.C. energy in the wave.

In its practical form the valve consists of the wire helix supported in a long glass envelope which fits through two wave guide stubs for input and output. At one end of the tube is a conventional electron gun assembly, at the other a collector electrode. An accelerating voltage of about 2kV is usual with a beam current of 1mA. Power amplifications of up to 200 can be realised with the amazing bandwidth of 800 Mc/s. at an operating frequency of 4,000 Mc/s.

This very wide bandwidth is possible since the valve uses a completely untuned energy exchange system, in marked distinction from magnetrons and klystrons which use very sharply tuned resonant cavities. The bandwidth of a travelling wave valve is only limited by the coupling arrangements at the beginning and end of the helix. The valve opens up a new field of microwave endeavour, and, in particular, allows the use of R.F. amplification prior to crystal mixers in receivers. In television and multichannel microwave telephony it should prove invaluable. A single valve could handle, say, 10,000 telephone channels or about 30–40 high definition television programmes at the same time.

CHAPTER 11 BIBLIOGRAPHY

Chapter 1

Code of Practice Relating to the use of Electronic Valves. Emergency British Standard 1106: 1945—British Standards Institution.

Use of Valves. J. R. Hughes. *Wireless World*, Sept. and Oct., 1943.

Chapter 2

Radio Engineering Handbook. F. E. Terman.

Performance of Resistance-capacity Coupled Amplifiers. Data Sheets XLV and XLVI. *Electronic Engineering*.

Performance of Choke-coupled Amplifiers at Audio Frequencies. Data Sheets XLVII, XLVIII and XLIX. *Electronic Engineering*.

Chapter 3

Dynamic Characteristics of Pentodes. S. J. H. Haefner. *Communications*, July, 1946.

Chapter 4

Simplified Methods of Computing Performance of Transmitting Tubes. W. G. Wagener. *Proc. I.R.E.*, January, 1937.

Radio Engineering Handbook. F. E. Terman. pp. 444–462.

The Graphical Determination of Optimum Operating Conditions for Transmitting Valves—Class "C" Telegraphy. L. G. Prinz and R. G. Mitchell. *Wireless Engineer*, September, 1942.

Chapter 5

Distortion in Diode Detectors. R. A. Lampitt. *Electronic Engineering*, March, 1947.

Some Application of Cathode Coupled Circuits. A. Hine. *R.S.G.B. Bulletin*, Feb. and March, 1943.

Infinite Impedance Detector. *Wireless World*, January, 1937.

Chapter 7

Choke Input Filter for Bi-Phase Rectifier Circuits. Data Sheet XXXVII. *Electronic Engineering*.

Condenser Input Power Supplies. Data Sheet XXXVIII. *Electronic Engineering*.

Chapter 8

The Cathode Follower. J. H. Hargreaves. *R.S.G.B. Bulletin*, May, 1942.

Valve Vade Mecum. Mainprise. *R.S.G.B. Bulletin*, July, August, November, 1943; January, 1944.

The Anode Follower. B. A. Briggs. *R.S.G.B. Bulletin*, March, 1947.

Grounded Grid Amplifiers for very Short Waves. J. Foster. I.E.E. Radio Section Paper.

Chapter 9

Fluctuations in Vacuum Tube Amplifiers and Input Systems. W. A. Harris. *R. C. A. Review*, April, 1941.

Fluctuations Induced in Vacuum Tube Grids at High Frequencies. D. O. North. *Proc. I.R.E.*, February, 1941.

Input Circuit Noise Calculations for F.M. and Television Receivers. W. J. Stolz. *Communications*, February, 1947.

Chapter 10

Communication on Centimetre Waves. J. H. Shankland. *R.S.G.B. Bulletin*. July, August, September, October, November, 1943.

Microwave Technique. J. H. Shankland and E. D. Hart.

INDEX

	Page
Abbreviations	3, 4
Acorn Valves	88
All Glass Valves	88
Amplifiers, A. F. Power	23–30
„ Choke capacity coupled	17, 18
„ Grounded grid	79–81
„ Paraphrase	77, 78
„ R.F. Power	31–41
„ Resistance capacity coupled	11–17
„ Transformer coupled	18
„ Video	19–22
„ Voltage	11–22
„ Wide band	19–22
Anode bend detectors	50, 51
„ Followers	75–77
Audio frequency power amplifiers	23–30
Bi-phase half-wave rectifiers	64
Cathodes	6–8
Cathode followers	71–75
Choke-capacity coupled amplifiers	17, 18
Choke input filter	69
Concentric Valves	90
Decoupling	44
Detectors	46–55
„ Anode bend	50, 51
„ Diode	46–48
„ Infinite impedance	51–55
„ Leaky grid	48–50
„ Power grid	49, 50
Diode detectors	46–48
„ Frequency changers	56, 57
Dissipation, Electrode	9
Driver stages for Class AB2 or B	29
Filter, Choke input	69
„ Condenser input	65
Frequency changers	56–63
„ „ Diode	56, 57
„ „ Triode	57, 58
„ „ Pentode	58–60
„ „ Multigrid	60–63
„ multipliers	41–43
Full-wave rectifiers	65
Grid bias	44
„ current (negative)	9
„ modulation	39
Grounded grid amplifiers	79–81
Half-wave rectifiers	65
Heater-cathode potential	10
Hum	10

Page

Infinite impedance detectors 51–55
Induced grid noise 84
Johnson noise 82
Klystron valves 93–95
Leaky grid detectors 48–50
" Lighthouse " valves 90
Magnetron valves 90, 91
Microwave valves 90
Miniature valves 88
Multi-grid frequency changers 60–63
Noise 82–86
,, Johnson 82
,, Shot 83
,, Induced grid 84
Oscillators 45
Output impedance 30
Oxide-coated cathode 8
Paraphrase amplifiers 77, 78
Pentode frequency changers 58–60
,, Voltage amplifiers 14–17
Phase splitters 77, 78
Planar valves 90
Power rectifiers 64–70
,, Grid detection 49, 50
R.F. power amplifiers 31–41
Resistance capacity coupled amplifiers 11–17
Rectification power 64–70
,, Half-wave 65
,, Full-wave 65
Ring seal valves 88
Shot noise 83
Symbols 5, 11, 31, 64
Smoothing 65–70
Transformer coupled amplifiers 18
Triode frequency changers 57, 58
,, Voltage amplifiers 13, 14
Travelling wave valves 96
Valves Acorn 8
,, All Glass 88
,, Klystron 93–95
,, Lighthouse 90
,, Magnetron 90, 91
,, Miniature 88
,, Ring Seal 88
,, Travelling wave 96
,, Velocity modulated 92, 93
Velocity modulation valves 92, 93
Video amplifiers 19–22
Voltage amplifiers 11–22
Wide band amplifiers 19–22
,, ,, Video amplifiers 19, 22
,, ,, R.F. 21, 22

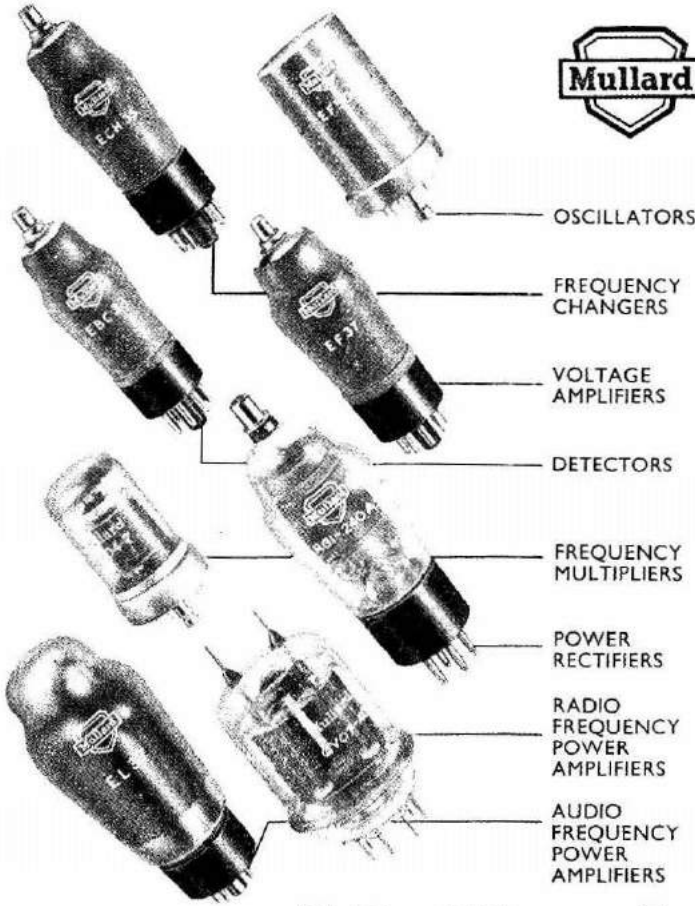

Some of the popular types included in the wide range of Mullard valves for Amateurs.

Mullard

THE MASTER VALVE

THE MULLARD WIRELESS SERVICE CO. LTD.
CENTURY HOUSE, SHAFTESBURY AVENUE, LONDON, W.C.2.

MVT25A

'AVO' Precision ELECTRICAL TESTING INSTRUMENTS

Registered Trade Mark

The 'AVO' VALVE CHARACTERISTIC METER

An accurate, compact, comprehensive Valve Tester for Engineers and Research establishments who require to reproduce any or all of the wide family of characteristics of a valve. Produces all necessary data to enable mutual conductance, Ia Va, Ia Vg, Ia Vs, etc., curves to be drawn, cathode/heater insulation to be measured with the heater hot, and "gas" checks to be made. Adequate compensation provided for line voltage fluctuations. Anode, screen and heater volts available cover the range required for all valves normally encountered. Rectifying and signal diodes are tested under load conditions. Polarised relay protects the instrument against incorrect adjustment or misuse, and offers a high measure of protection to the valve under test.

The 'AVO' VALVE TESTER

Indicates mutual conductance direct in mA/V. Tests at makers' specified electrode voltages. One panel for all types of English and American valves. Any valve base arrangement can be set up. Easily operated multi-roller Universal Selector Switch. Tests Cathode/Heater insulation of an indirectly heated valve when the valve is hot; emission of diodes and rectifiers; indicates filament continuity and electrode "shorts." Coloured scale indicates condition of valve as "Good," "Indifferent," or "Replace." No calculations involved. Works from A.C. mains.

Supplied complete with Universal Valve Panel fitted with Selector Switch enabling all English, American and Continental valves to be tested easily. Comprehensive Valve Data Book supplied containing test details of nearly 2,000 English and American valves.

Descriptive Leaflets gladly sent on request

Sole Proprietors and Manufacturers :

THE AUTOMATIC COIL WINDER & ELECTRICAL EQUIPMENT CO. LTD.

Winder House, Douglas Street, London, S.W.1 — *Phone : VICtoria 3404-9*

CLYDESDALE

The Radioman's Shop

For Bargains in Ex-Services Electronic Equipment

1,000's OF ITEMS AVAILABLE

RECEIVERS.	LOUD HAILERS.
AMPLIFIERS.	CATHODE RAY UNITS.
COIL PACKS.	MILLIAMETERS.
IFF UNITS.	KILOVOLTMETERS.
MICROPHONES.	VOLTMETERS.
AERIALS.	HEADPHONES.
ETC.	ETC.

At remarkable low prices.

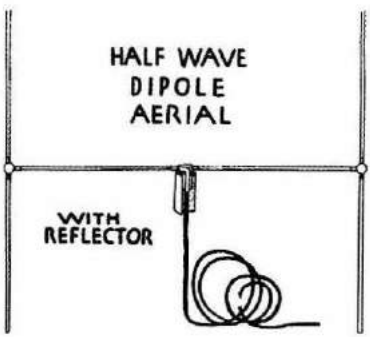

BRAND NEW

DIPOLE AERIAL

Half-Wave Dipole Aerial with reflector and crossarm for approx. 6 metres either vertical or horizontal mounting to existing wall bracket or mast. Robust construction. Dipole 9ft. 3in., Crossarm 4ft. 11½in., Reflector 9ft. 7in. with 39in. of Co-axial cable and co-axial plug.

CLYDESDALE'S PRICE ONLY **21/-** each
Carriage paid.

Or packed in a stout wood case (non-returnable) **28/6** each

Circuits available: T1154 Tx, 2/3; R1116 Rx, 2/3; R1155 Rx, 1/3; R1155 A.C. Unit, 6d.; MCR1 Rx, 2/9; R1124 Rx, R1125 Rx and Power Unit, 1/9; R1224 Rx, 1/3; American IFF. ABK Rx/Tx, 1/9; A1134 Amp., 1/3. All post free. Staff: Hams GM3ASM, GM3BL.

Send now for New Illustrated List. Please print Name and Address.

Complete Stocks—Eddystone, Q Max, Denco—Components

CLYDESDALE *SUPPLY CO. LTD.*

2 BRIDGE STREET - GLASGOW - C.5

'Phone: SOUTH 2706.

Visit our Branches in Scotland, England and Northern Ireland.

"VALVE TECHNIQUE"

by

MAZDA

SP61*

RATING:

Heater Voltage	*6.3*
Heater Current (amps)	*0.6*
Maximum Anode Voltage	*250*
Maximum Screen Voltage	*250*
‡Mutual Conductance (ma/V)	*8.5*

‡ Taken at Va = 200; Vs = 200; Vg = 1.5

GENERAL:

The SP61 is a high slope screened H.F. Pentode designed for use on A.C. mains in the H.F. and I.F. stages of a Television receiver.
Other uses are:

1. Video amplifier in circuits where the capacity across the output load is low.
2. Frequency changer in conjunction with a separate oscillator valve such as the P61.
3. Certain classes of audio amplification work where gains of over 150 can be realised.

The valve is fully metallised and is fitted with a Mazda octal base.

** Also made with 4v. heater and known as SP41*

LIST PRICE 10/6d. (plus 3/5d. purchase tax)

P61†

RATING:

Heater Voltage	*6·3*
Heater Current (amps)	*0.6*
Maximum Anode Voltage	*250*
§Mutual Conductance	*8.0*
§Amplification Factor	*17*
Maximum Peak Anode Current (mA)	*30*
Maximum Anode Dissipation (watts)	*4.0*

§ Taken at Va = 100; Vg = 0

GENERAL:

The P61 is a triode and has been primarily designed for use as an oscillator in television receivers. It may also be used as an oscillator in all-wave receivers where a single valve frequency changer is not employed.
The valve is fully metallised and is fitted with a Mazda octal base.

† Also made with 4v. heater and known as P41

LIST PRICE 9/6d. (plus 3/1d. purchase tax)

THE EDISON SWAN ELECTRIC COMPANY LIMITED

RADIO DIVISION

155 CHARING CROSS ROAD, LONDON, W.C.2

Standard Cases for Delivery Now

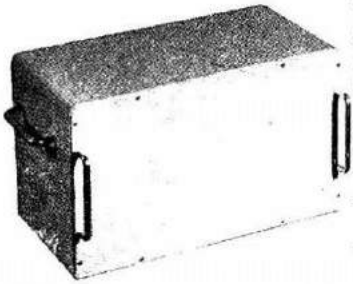

TYPE 1053

Superbly made model of highest grade heavy gauge sheet steel, strongly welded and complete with internal chassis and chromium-plated handles. Beautifully finished in a variety of colours.

Type 1053A.
15¼" w. x 8" d. x 9" h. ... £4. 5. 0

Type 1053B.
17¼" w. x 9" d. x 10¾" h. ... £5. 15. 0

Type 1053C.
24" w. x 12" d. x 15" h. ... £7. 17. 6

TYPE 1022

A precision built case, designed in four sizes, to meet many requirements. Special features include pressed feet, front panels fixed by screws into hank-bushes, louvres at sides and in detachable back panel.

Type 1022A.
21½" w. x 10½" d. x 10½" h. £2. 19. 0

Type 1022B.
21½" w. x 10½" d. x 15" h. £3. 9. 0

Type 1022C.
21½" w. x 10½" d. x 22" h. £4. 5. 0

Type 1022D.
21½" w. x 10½" d. x 30" h. £5. 15. 0

Type 1022 cases are also available with a recessed hinged lid in the top panel or fitted with heavy gauge standard rack mounting panels. Chassis and brackets available if required.

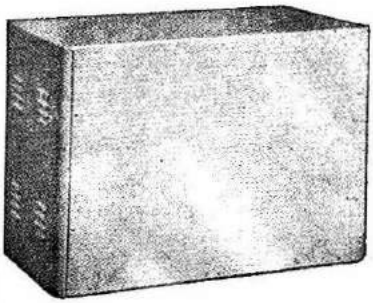

The cases illustrated above are just two of our standard range available from stock. Our descriptive folder gives details of a full range of cases, also details of a range of handles, standard rack assemblies, etc. Write to-day for your copy.

IMHOF'S

ALFRED IMHOF LTD., 112-116 New Oxford St., London, W.C.1

Telephone : MUSeum 5944.

PRINTED BY SIR JOSEPH CAUSTON & SONS, LTD., LONDON AND EASTLEIGH.

Radio Society of Great Britain